THE ASIA PARTS LIST

Never use other than GENUINE ASIA PARTS
they are standardized, tested and proved.

Using genuine parts saves your time and money above all.
Ensures that your machine will always be ready for immediate work.

CONTENTS

No.	Group	Description	Page
1	G010A	Former Group	24
2	G020A	Former Rotor Group	28
3	G030A	Vinyl Mulching System Group	32
4	G040A	Restoration System Group	36
5	G050A	Former Extension Group	40

ASIA

G010A

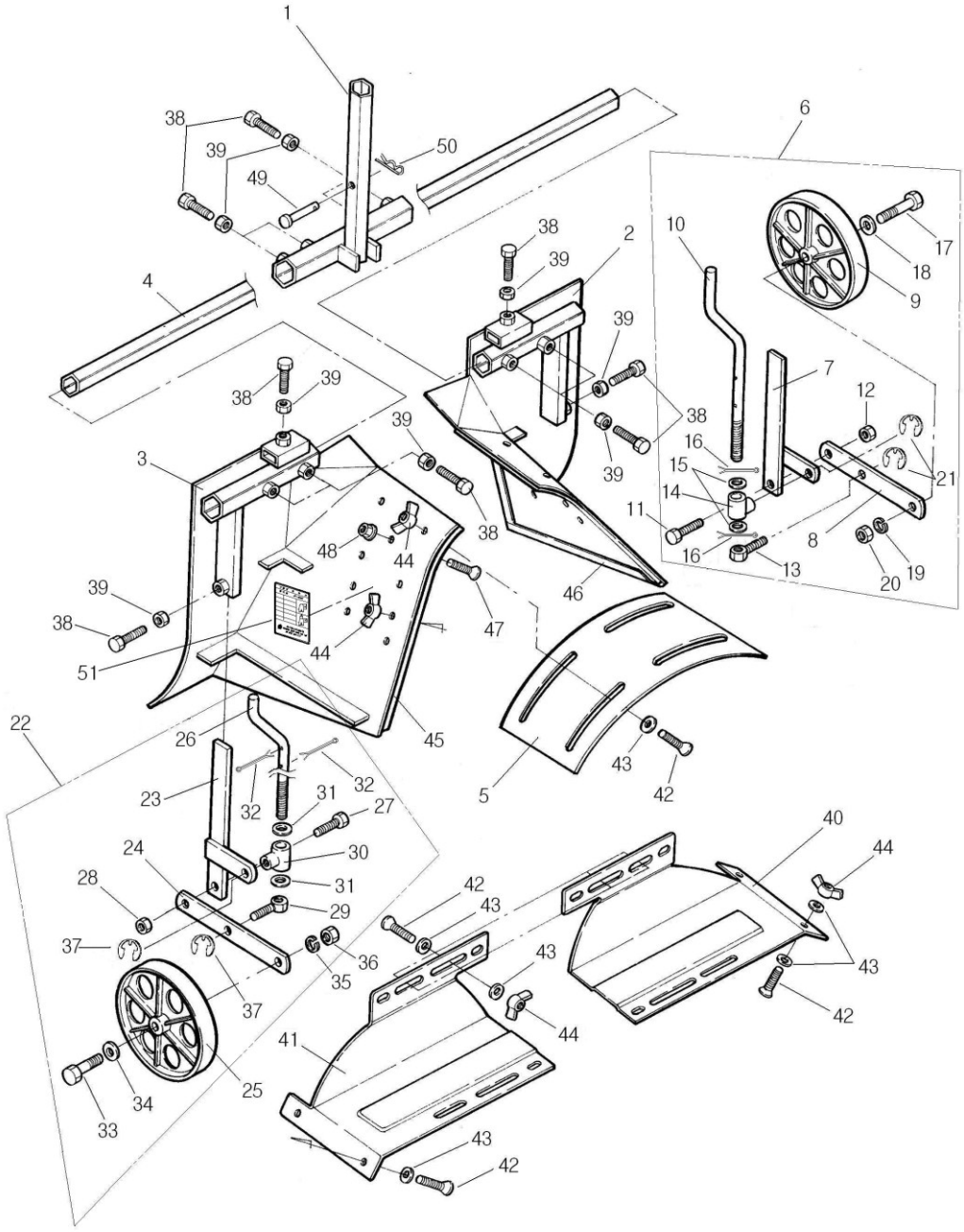
1
38
39
49
50
6
10
17
18
9
38
2
39
4
39
7
12
38
39
16
3
39
15
21
14
11
38
8
48
44
16
13
19
20
39
46
38
47
51
44
45
22
26
43
42
5
23
32
32
31
27
24
30
40
44
28
31
42
29
43
37
36
43
35
43
37
42
44
41
25
34
33
43
42

2012.07 **G010A** **Former Group** FM-120

No.	Parts No.	Size	Parts Name	Q'ty	Remarks
1	AF-1001		T-Support	1	
2	AB111-10030		Former Ass'y (L)	1	
3	AB111-10130		Former Ass'y (R)	1	
4	AF-1017		Pipe	1	
5	AF-1018		Adjusting Plate	1	
6	AB111-10190		Tail Wheel Ass'y (L)	1	
7	AB111-10610		Support (L)	1	
8	AB111-10200		Wheel Support	1	
9	AB111-10210		Tail Wheel	1	
10	AB111-10630		Control Handle	1	
11	A1050-51035	M10xP1.25x35	Bolt	1	
12	AB111-10640		Lock Nut	1	
13	AB111-10650		Adjusting Nut	1	
14	AB111-10660		Adjusting Pin	1	
15	A201-12Z	M12	Plain Washer	2	
16	A5525-51200		Pin	2	
17	A1050-51260		Bolt	1	
18	A200-12Z	M12	Plain Washer	1	
19	A204-12Z	M12	Spring Washer	1	
20	A164-12Z	M12xP1.25	Nut	1	
21	A186-9		Snap Ring	2	
22	AB111-10220		Tail Wheel Ass'y (R)	1	
23	AB111-10620		Support (R)	1	
24	AB111-10200		Wheel Support	1	
25	AB111-10210		Tail Wheel	1	
26	AB111-10630		Control Handle	1	
27	A1050-51035		Bolt	1	
28	AB111-10640		Lock Nut	1	
29	AB111-10650		Adjusting Nut	1	
30	AB111-10660		Adjusting Pin	1	

G010A

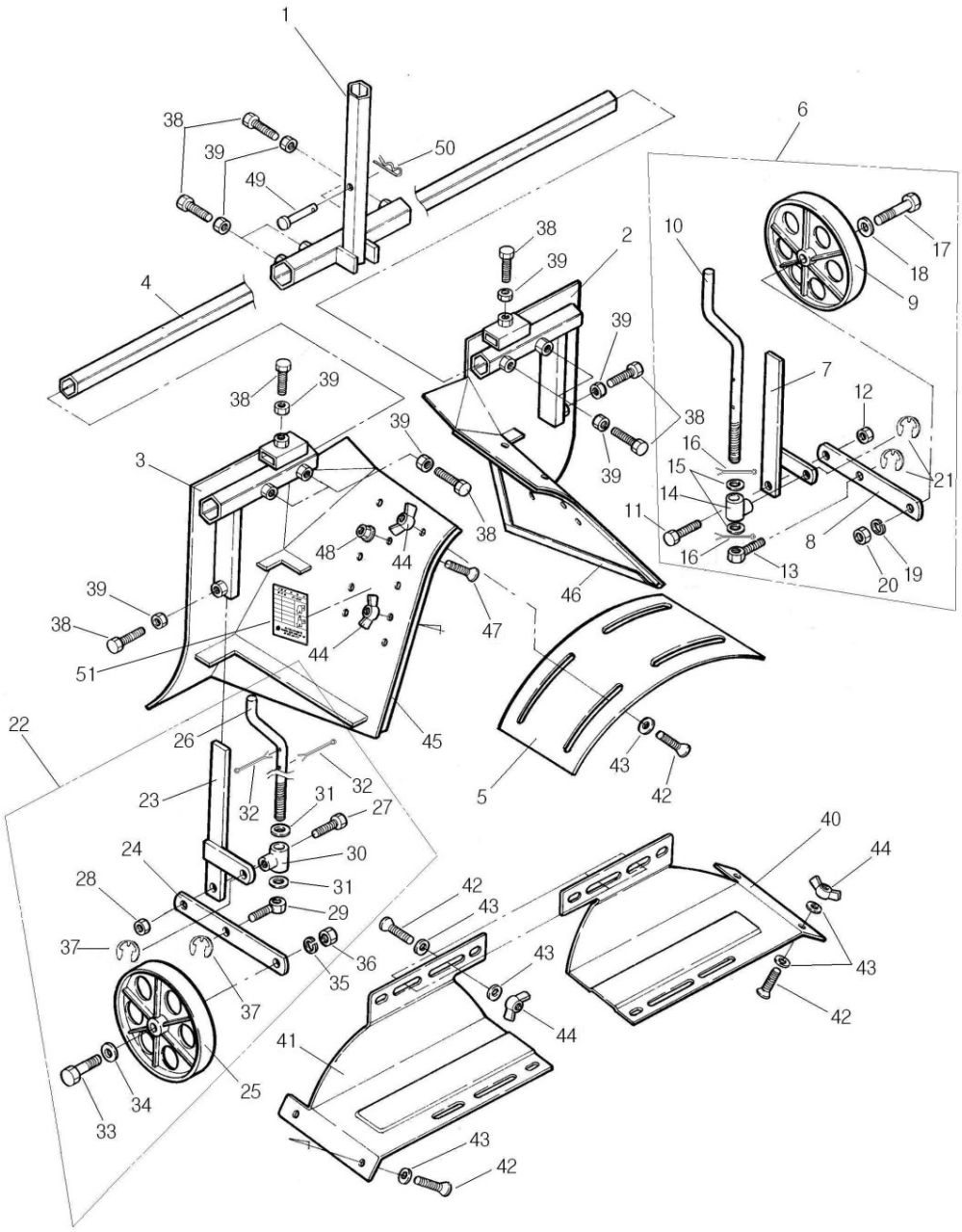
1
38
39
49
50
6
10
17
18
9
38
2
39
4
39
7
12
38
39
39
16
3
15
21
14
11
38
8
48
44
16
13
19
20
39
46
38
47
44
51
45
22
26
43
42
5
23
32
32
31
27
30
24
31
28
29
42
43
40
44
37
36
35
43
43
37
42
44
41
25
34
33
43
42

2012.07 **G010A** **Former Group** FM-120

No.	Parts No.	Size	Parts Name	Q'ty	Remarks
31	A201-12Z	M12	Plain Washer	2	
32	A5511-50330		Pin	2	
33	A1050-51260	M12xP1.25x60	Bolt	1	
34	A200-12Z	M12	Plain Washer	1	
35	A204-12Z	M12	Spring Washer	1	
36	A164-12Z	M12xP1.25	Nut	1	
37	A186-9		Snap Ring	2	
38	AF-1024		Bolt	12	
39	A164-10Z	M10xP1.25	Nut	12	
40	AF-1025		Former (L)	1	
41	AF-1026		Former (R)	1	
42	A100-8x18Z	M8xP1.25x18	Bolt	12	
43	A200-8Z	M8	Plain Washer	24	
44	A181-8Z	M8	Wing Nut	12	
45	AF-1028		Plate (L)	1	
46	AF-1029		Plate (R)	1	
47	A133-6x16Z		Bolt	2	
48	A580-6Z	M6xP1.0x16	Flange Nut	2	
49	DT-0507A	M6xP1.0	Pin	1	
50	A321-14Z		Snap Pin	1	
51	AB111-10309		Type Plate	1	

G020A

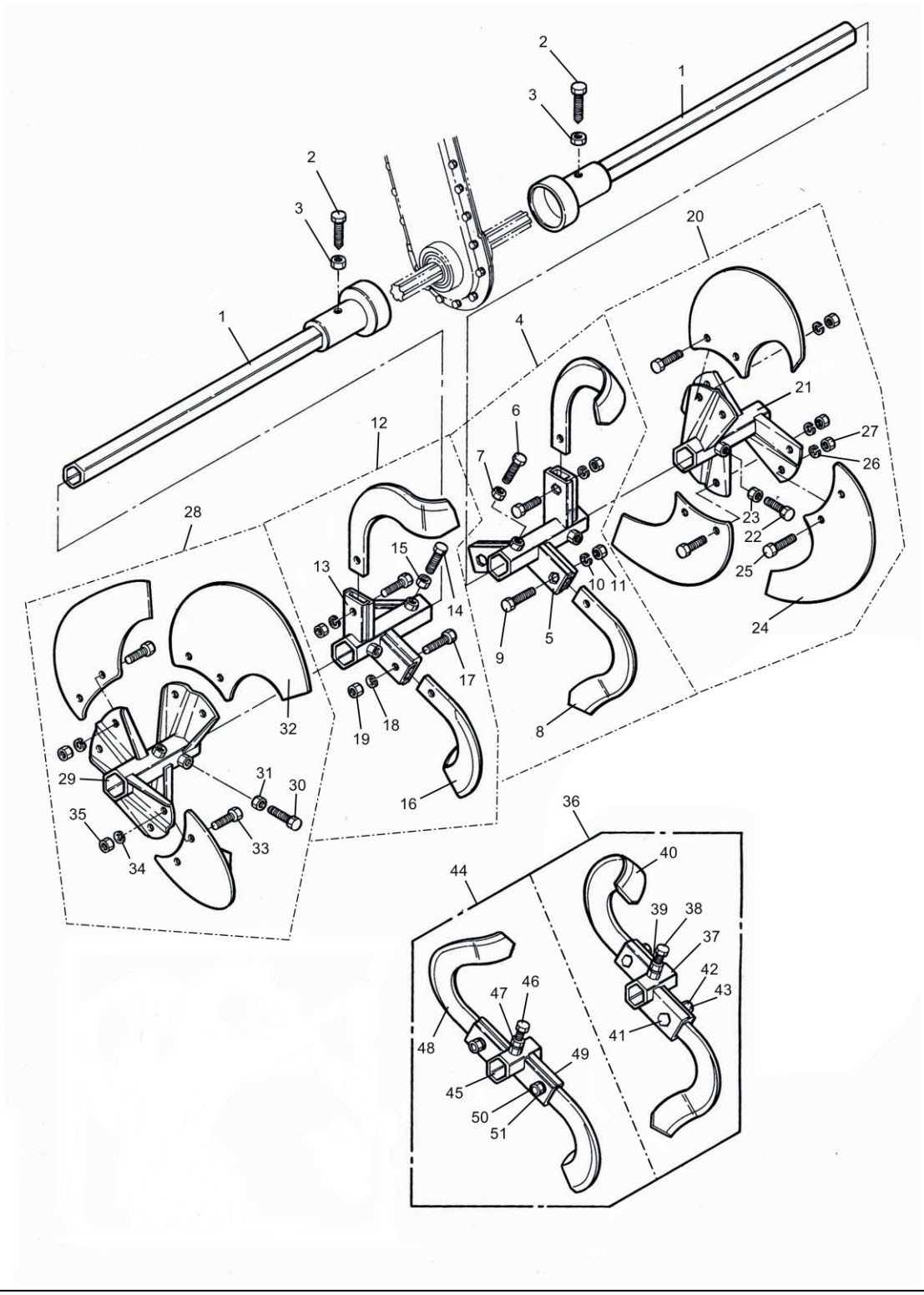
1
2
3
4
5
6
7
8
9
10
11
12
13
14
15
16
17
18
19
20
21
22
23
24
25
26
27
28
29
30
31
32
33
34
35
36
37
38
39
40
41
42
43
44
45
46
47
48
49
50
51

2012.07 **G020A** **Former Rotor Group** FM-120

No.	Parts No.	Size	Parts Name	Q'ty	Remarks
1	AF-2001B		Shaft Rotor	2	
2	DT-0708		Lock Bolt	2	
3	A163-10Z	M10xP1.5	Nut	2	
4	AB110-20041		Rotor Shaft (A) Ass'y (L)	(1)	5 ~ 11
5	AF-2005A		Rotor Shaft Ass'y A (L)	1	
6	AF-1024	M10x30xP1.5	Bolt	2	
7	A164-10Z	M10xP1.5	Nut	2	
8	B03 0131A		Rotor Blade A (L)	3	
9	A102-10x25Z	7T	Bolt	3	
10	A204-10Z	M10	Spring Washer	3	
11	A164-10Z	M10xP1.5	Nut	3	
12	AB110-20071		Rotor Shaft (B)Ass'y (R)	(1)	13 ~ 19
13	AF-2008A		Rotor Shaft Ass'y A (R)	1	
14	AF-1024	M10x30xP1.5	Bolt	2	
15	A164-10Z	M10xP1.5	Nut	2	
16	B03 0132A		Rotor Blade A (R)	3	
17	A102-10x25Z		Bolt	3	
18	A204-10Z	M10	Spring Washer	3	
19	A164-10Z	M10xP1.5	Nut	3	
20	AB110-20121		Rotor Shaft (B) Ass'y (L)	(1)	21 ~ 27
21	AF-2013		Rotor Shaft Ass'y (L)	1	
22	AF-1024	M10x30xP1.5	Bolt	2	
23	A164-10Z	M10xP1.5	Nut	2	
24	AF-2019		Rotor Blade B (L)	4	
25	A100-8x20Z	M8xP1.25x20	Bolt	8	
26	A204-8Z	M8	Spring Washer	8	
27	A159-8Z	M8xP1.25	Nut (7T)	8	
28	AB110-20151		Rotor Shaft (B)Ass'y (R)	(1)	29 ~ 35
29	AF-2016		Rotor Shaft Ass'y (R)	1	
30	AF-1024		Bolt	2	

G020A

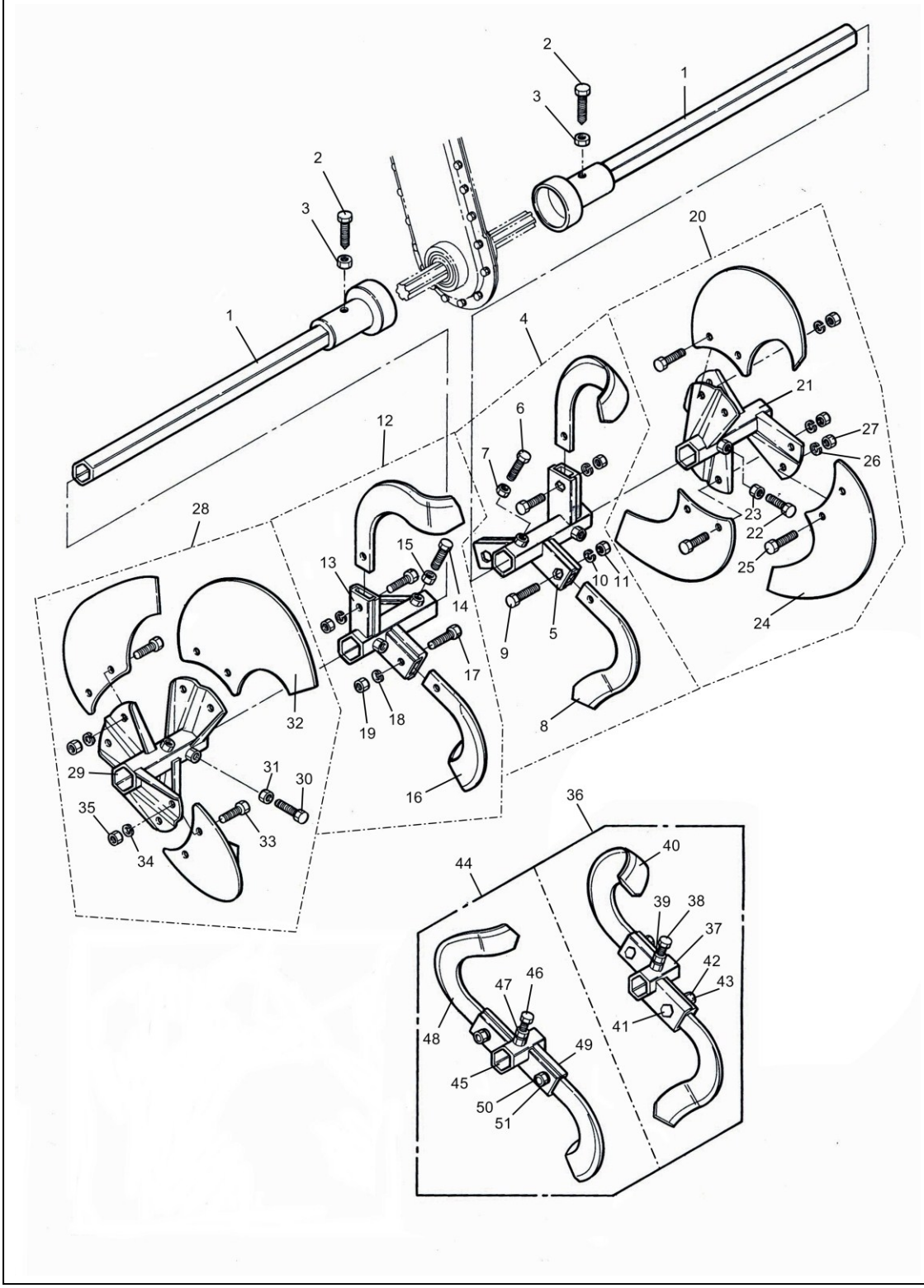
1
2
3
4
5
6
7
8
9
10
11
12
13
14
15
16
17
18
19
20
21
22
23
24
25
26
27
28
29
30
31
32
33
34
35
36
37
38
39
40
41
42
43
44
45
46
47
48
49
50
51

2012.07 **G020A** **Former Rotor Group** FM-120

No.	Parts No.	Size	Parts Name	Q'ty	Remarks
31	A164-10Z	M10xP1.5	Nut	2	
32	AF-2020		Rotor Blade B (R)	4	
33	A100-8x20Z	M8xP1.25x20	Bolt	8	
34	A204-8Z	M8	Spring Washer	8	
35	A159-8Z	M8xP1.25	Nut (7T)	8	
36	AB110-20201		Rotor Assembly(Left, Small)	(1)	37 ~ 43
37	AF-2021		Extended Sheath (L)	1	
38	AF-1024		Bolt	1	
39	A164-10Z	M10xP1.5	Nut	1	
40	B03 0131A		Rotor Blade A (L)	2	
41	A102-10x25Z	M10xP1.5x25	Bolt	2	
42	A204-10Z	M10	Spring Washer	2	
43	A164-10Z	M10xP1.5	Nut	2	
44	AB110-20231		Rotor Assembly(Right, Small)	(1)	45 ~ 51
45	AF-2022		Extended Sheath (R)	1	
46	AF-1024		Bolt	1	
47	A164-10Z	M10xP1.5	Nut	1	
48	B03 0132A		Rotor Blade A (R)	2	
49	A102-10x25Z	M10xP1.5x25	Bolt	2	
50	A204-10Z	M10	Spring Washer	2	
51	A164-10Z	M10xP1.5	Nut	2	

ASIA

G030A

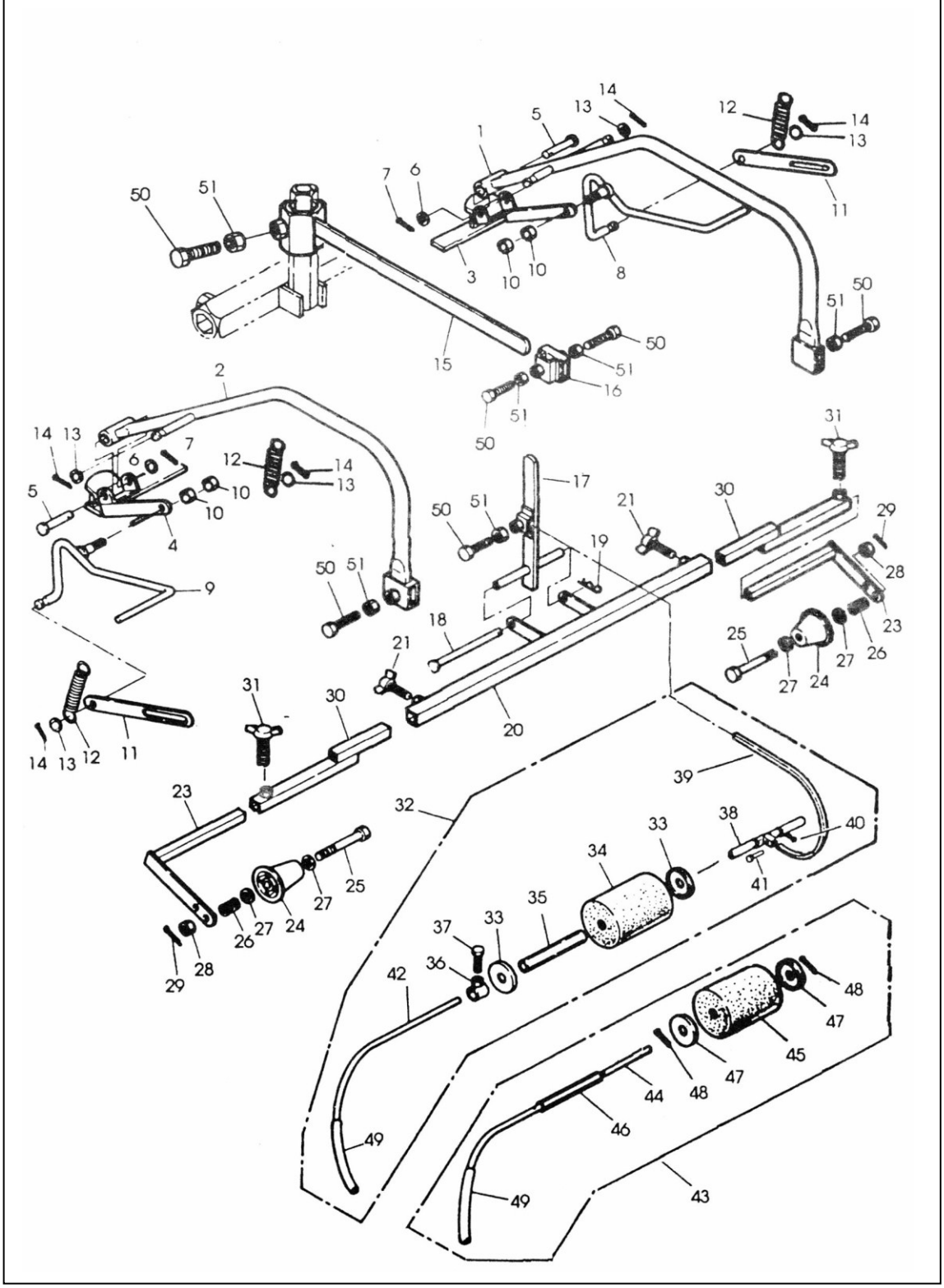
1
2
3
4
5
6
7
8
9
10
11
12
13
14
15
16
17
18
19
20
21
23
24
25
26
27
28
29
30
31
32
33
34
35
36
37
38
39
40
41
42
43
44
45
46
47
48
49
50
51

2012.07 **G030A** **Vinyl Mulching System Group** FM-120

No.	Parts No.	Size	Parts Name	Q'ty	Remarks
1	FM-3001A		Side Frame(L)	1	
2	FM-3002A		Side Frame(R)	1	
3	FM-3003A		Fixing Ass'y(L)	1	
4	FM-3009A		Fixing Ass'y(R)	1	
5	A325-12x65Z		Pin	2	
6	A200-12Z	M12	Plain Washer	2	
7	A320-4x20Z		Split Pin	2	
8	FM-3010A		Grip Ass'y(L)	1	
9	FM-3013A		Grip Ass'y(R)	1	
10	A161-12Z	M12XP1.25	Nut	4	
11	FM-3015A		Guide	2	
12	FM-3016A		Spring	4	
13	A200-12Z	M12	Plain Washer	8	
14	A320-2.5x20Z		Split Pin	8	
15	FM-3017A		Center Supporter	1	
16	AM-1020		Cross Socket	1	
17	AM-1021A		Sheet Rod	1	
18	AM-1022		Rod Pin	1	
19	A321-08Z		Snap Pin	1	
20	AM-1023A		Sheet Supporter	1	
21	A154-8x16Z	M8xP1.25x16	Wing Bolt	2	
22	AM-1024		Sheet Arm Ass'y	(2)	(23~29)
23	AM-1025		Sheet Arm	2	
24	AM-1026		Sheet Wheel	2	
25	AM-1027		Bolt	2	
26	AM-1028		Spring	2	
27	A200-10Z	M10	Plain Washer	4	
28	A164-10Z	M10xP1.25	Nut	2	
29	A321-10Z		Snap Pin	2	
30	AM-1029		Sheet Arm Connrctor	2	

ASIA

G030A

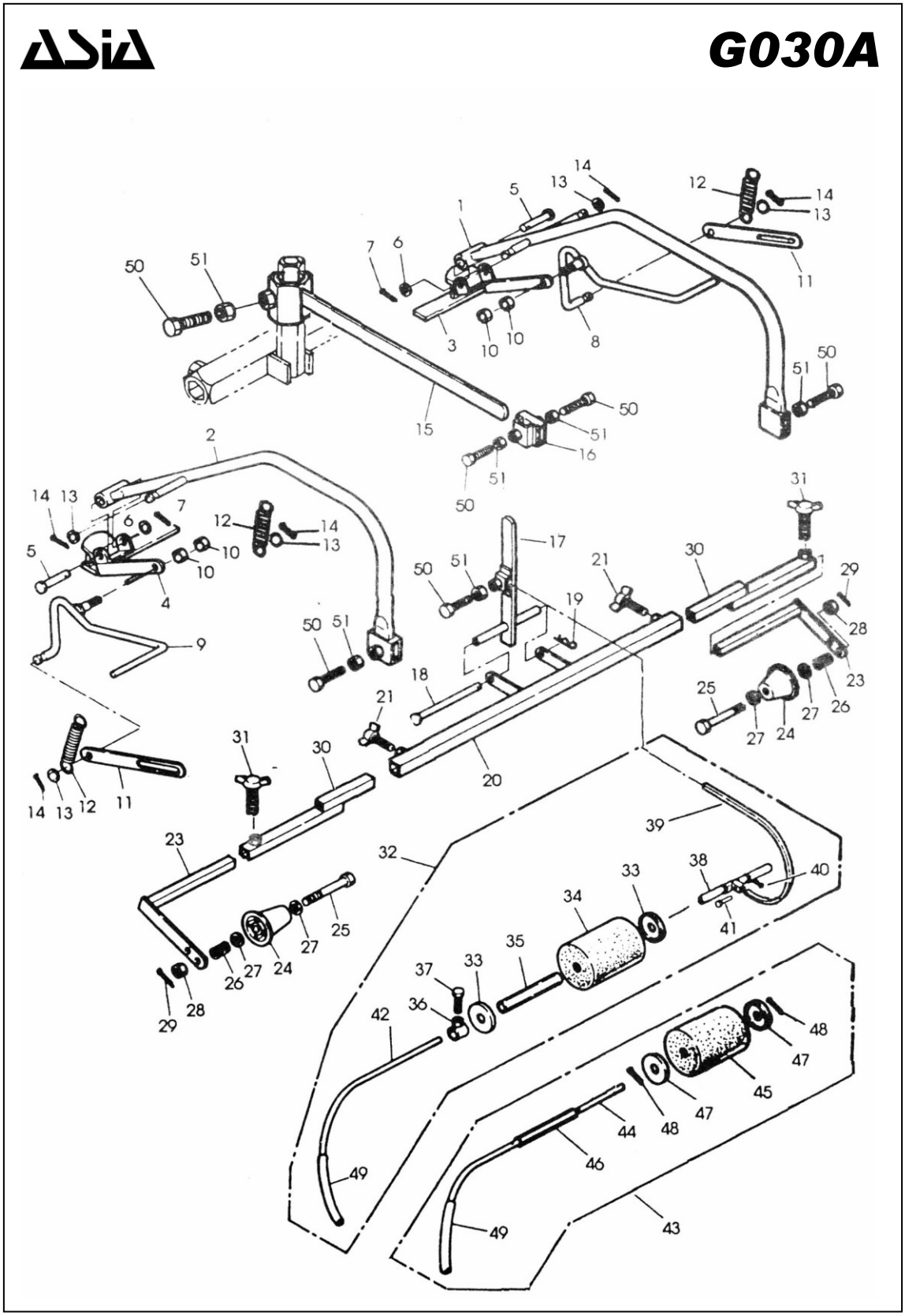
1
2
3
4
5
6
7
8
9
10
11
12
13
14
15
16
17
18
19
20
21
23
24
25
26
27
28
29
30
31
32
33
34
35
36
37
38
39
40
41
42
43
44
45
46
47
48
49
50
51

2012.07 **G030A** **Vinyl Mulching System Group** FM-120

No.	Parts No.	Size	Parts Name	Q'ty	Remarks
31	A154-8x16Z	M8xP1.25x16	Wing Bolt	2	
32	FM-3025A		Sheet Guide Ass'y	(1)	
33	FM-3027		Bracket	4	
34	FM-3028		Sponge Roller	2	
35	FM-3029		Vinyl Tube	2	
36	FM-3030		Fixing Tube	2	
37	A100-8x20Z	M8xP1.25x20	Bolt	2	
38	FM-3040		Sheet Guide	1	
39	AB120-01331		Sheet Guide Rod	1	
40	A321-10Z		Snap Pin	1	
41	A325-6x21Z	M12	Pin	1	
42	FM-3031		Vinyl Guide(A) Ass'y	2	
43	AB130-30321		Vinyl Guide(B) Ass'y	(2)	(44~49)
44	AB130-30351		Vinyl Guide (B)	2	
45	AM-1034	M12XP1.25	Sponge Roller	2	
46	AM-1035		Vinyl Tube(B)	2	
47	AM-1036		Bracket	4	
48	A321-08Z	M12	Snap Pin	4	
49	FM-3036		Vinyl Tube(A)	4	
50	AF-1024		Bolt	6	
51	A164-10Z		Nut	6	

ASIA

G040A

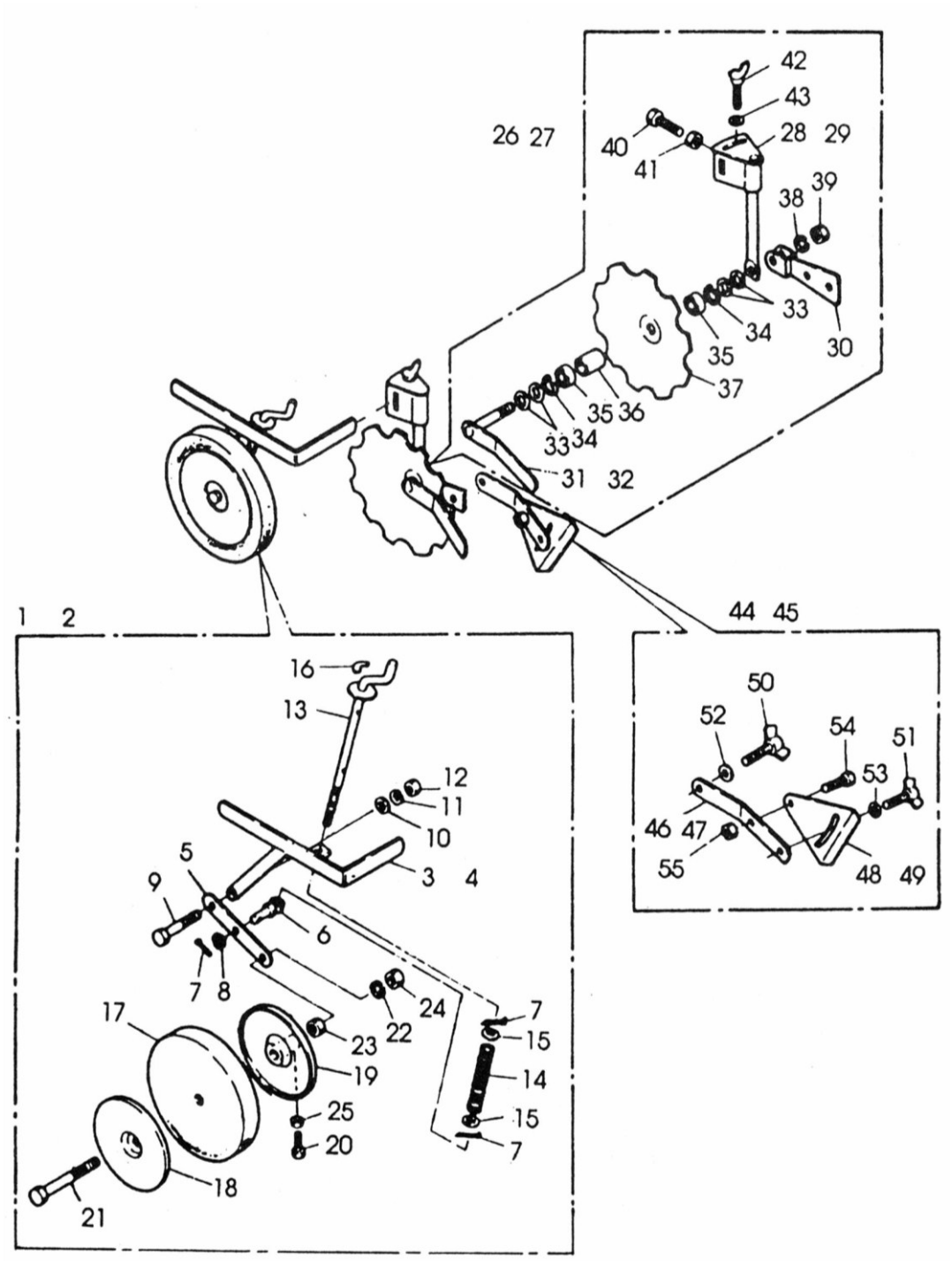
26 27
42
43
40
41
28 29
38
39
33
34
35
30
37
35 36
33 34
31 32
1 2
16
13
12
11
10
3 4
5
9
6
7 8
24
22
23
17
19
25
20
18
21
7
15
14
15
7
44 45
50
52
54
51
53
46 47
55
48 49

2012.07 **G040A** **Restoration System Group** FM-120

No.	Parts No.	Size	Parts Name	Q'ty	Remarks
01	AM-2001		Sponge Wheel Ass'y(L)	(1)	
02	AM-2002		Sponge Wheel Ass'y(R)	(1)	
03	AM-2003A		Frame (L)	1	
04	AM-2007A		Frame (R)	1	
05	AM-2008		Bracket	2	
06	AM-2009		Nut	2	
07	A320-3.2x16Z	3.2x16	Split Pin	6	
08	A200-12Z	M12	Plain Washer	2	
09	AM-2011		Bolt	2	
10	A200-8Z	M8	Plain Washer	2	
11	A204-8Z	M8	Spring Washer	2	
12	A160-8Z	M8xP1.25	Nut	2	
13	AM-2012		Handle	2	
14	AM-2013		Spring Washer	2	
15	A200-12Z	M12	Plain Washer	4	
16	AM-2014		Label	2	
17	AM-2015		Sponge Roller	2	
18	AM-2016		Side Plate (A)	2	
19	AM-2019		Side Plate (B)	2	
20	A100-6x18Z	M6xP1.0x18	Bolt	2	
21	A102-12x82Z	M12P1.75x82	Bolt	2	
22	A204-12Z	M12	Spring Washer	2	(23~29)
23	A163-12Z	M12xP1.75	Nut	2	
24	A164-12Z	M12xP1.75	Nut	2	
25	A160-6Z	M6xP1.0	nut	2	
26	AM-2022A		Disk Wheel Ass'y(L)	(1)	
27	AM-2023A		Disk Wheel Ass'y(R)	(1)	
28	AM-2024		Disk Supporter (L)	1	
29	AM-2028		Disk Supporter (R)	1	
30	AM-2030		Plate	2	

ASIA

G040A

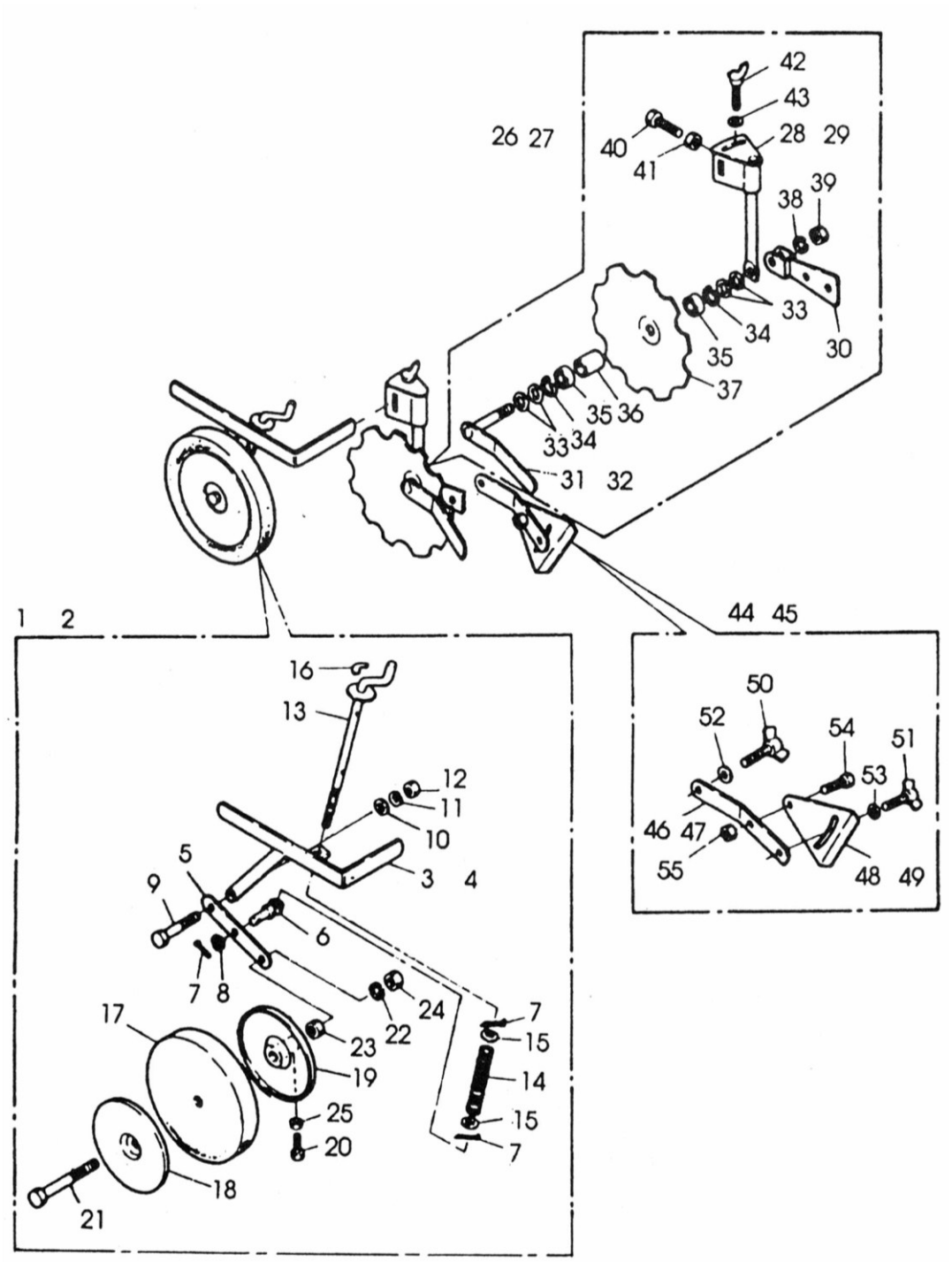
26 27
42
43
40
41
28 29
38
39
33
34
35
30
37
35 36
33 34
31 32
1 2
16
13
12
11
10
3 4
5
9
6
7 8
24
22
23
17
19
25
20
18
21
7
15
14
15
7
44 45
50
52
54
51
53
46 47
55
48 49

2012.07 **G040A** **Restoration System Group** FM-120

No.	Parts No.	Size	Parts Name	Q'ty	Remarks
31	AM-2031		Disk Scraper (L)	1	
32	AM-2032		Disk Scraper (R)	1	
33	A204-12Z	M12	Plain Washer	8	
34	A184-35		Snap Ring	4	
35	A400-6003UU		Bearing	4	
36	AM-2033A		Sleever	2	
37	AM-2034A		Disk Ass'y	2	
38	A204-12Z	M12	Spring Washer	2	
39	A164-12Z	M12xP1.75	Nut	2	
40	AM-1018		Bolt	2	
41	A164-10Z	M10xP1.5	Nut	2	
42	AM-2035		Bolt	2	
43	AM-2036		Washer	2	
44	AM-2038		Restoraion Plate Ass'y(L)	(1)	
45	AM-2039		Restoraion Plate Ass'y(R)	(1)	
46	AM-2040		Adjust Lever (L)	1	
47	AM-2041		Adjust Lever (R)	1	
48	AM-2042		Restoration Plate (L)	1	
49	AM-2043		Restoration Plate (R)	1	
50	A154-10x16Z	M10xP1.25x16	Wing Bolt	2	
51	A154-8x16Z	M8xP1.25x16	Wing Bolt	2	
52	A200-10Z	M10	Plain Washer	2	
53	A200-8Z	M8	Plain Washer	2	
54	A100-8x14Z	M8xP1.25x14	Bolt	2	
55	A160-8Z	M8xP1.25	Nut	2	

ASIA

G050A

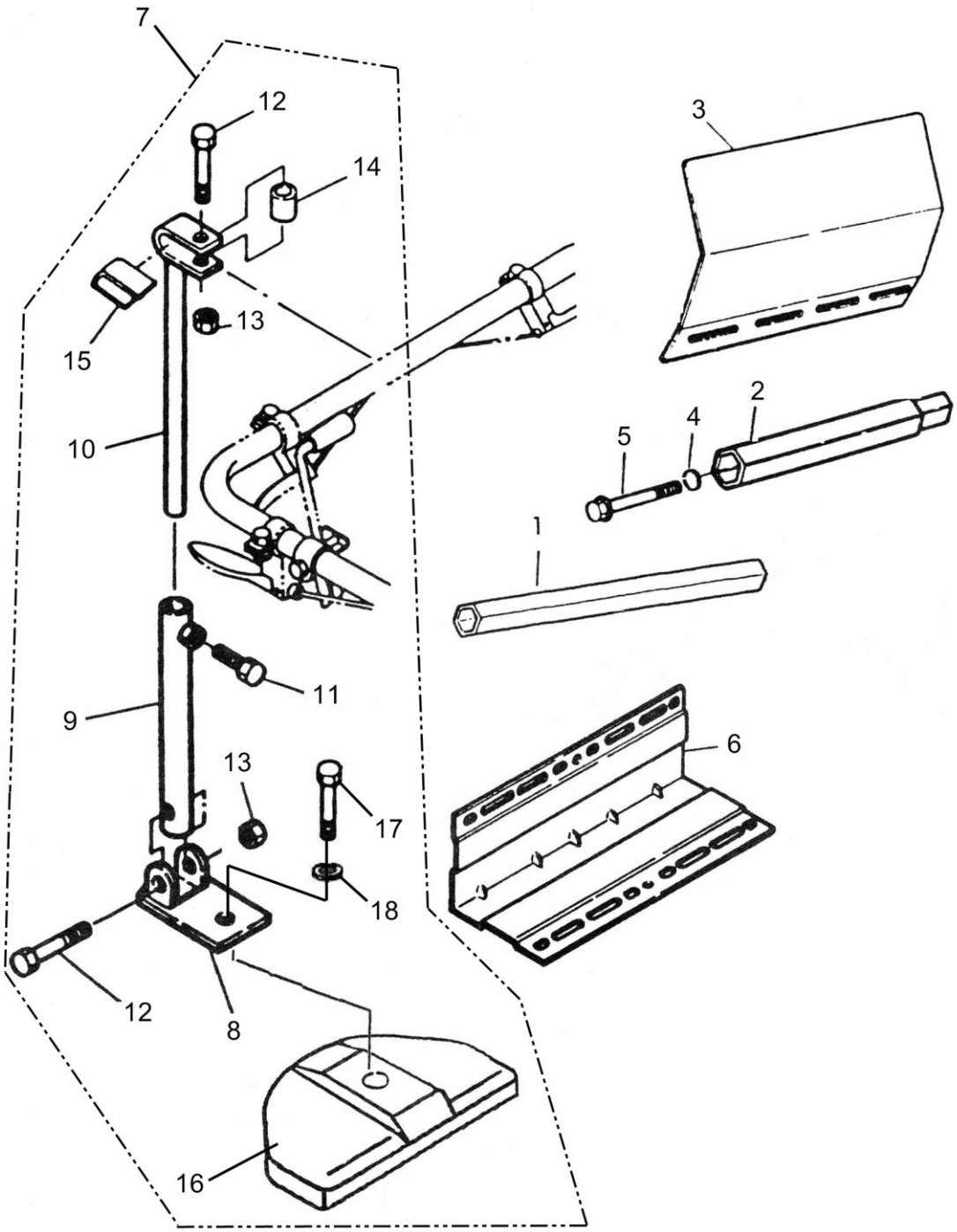

2012.07 **G050A** **Former Extension Group** FM-120

No.	Parts No.	Size	Parts Name	Q'ty	Remarks
1	AM-2031		Pipe	1	
2	FM-2016		Extension Shaft	2	
3	FM-3033A	M12	Cover	2	
4	A204-10Z	M10	Spring Washer	2	
5	FM-3034		Bolt	2	
6	FM-3038		Former (C)	1	
7	FM-4001		Handle Fixing	(1)	(8~18)
8	FM-4002		Bottom Ass'y	1	
9	FM-4003		Handle Supporter	1	
10	FM-4004		Handle Catcher	1	
11	A100-10x16Z	M10xP1.25x16	Bolt	1	
12	A561-10x45Z	M10xP1.25x45	Bolt	2	
13	A581-10Z	M10xP1.25	Flange Nut	2	
14	FM-4006		Spacer	1	
15	FM-4007		Rubber Plate	1	
16	AA010-03520		Balance Weight	1	
17	A1052-51255		Bolt	1	
18	A204-12Z	M12	Spring Washer	1	