ASIA
FORMER & MULCHER

OPERATING MANUAL & PARTS LIST

FM-120

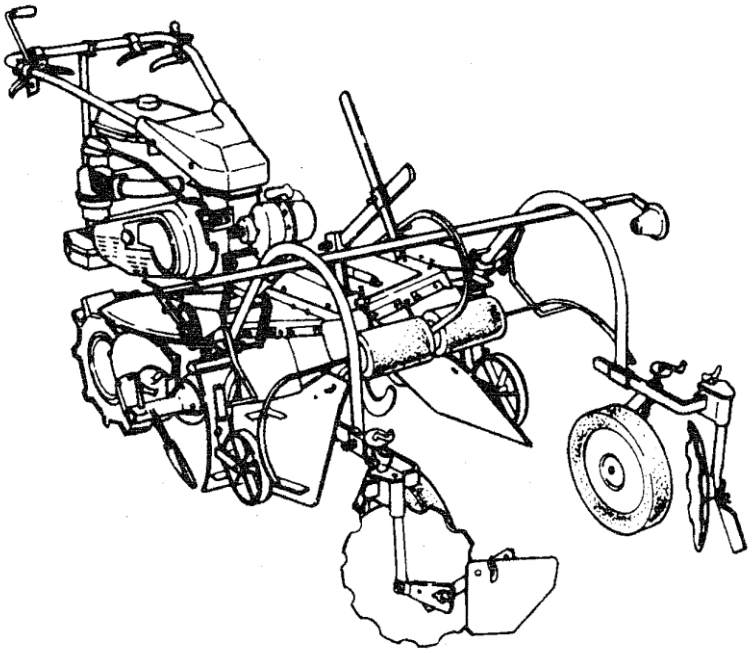

ASIA TECH. CO., LTD.