Contents

1. Safety Issues ---------- 3

2. Name of each part of the machine ---------- 6

3. Specifications ---------- 7

4. Attaching the Implement ---------- 8

5. Operating Method ---------- 14

6. Checking Before Operation and About Safe Operation ---------- 15

7. Maintenance and Preservation of the Machine ---------- 17

8. Cause / Countermeasure about Operational Fault and Error ---------- 18

For Safety, Please Read the Instruction Manual

1. Safety Issues

■ **Warning Signs**

Warning signs, mentioned in this manual, indicate dangerous situations as explained below contents. Please read the instruction manual carefully for safe use.

When warning sign is damaged or out of its place, please purchase new warning sign and place it on the designated spot.

Danger

■ **This sign indicates the machine is in a serious situation which could lead to a death or a serious injury if not observed.**

Warning

■ **This indicates the potential signal for a serious injury if not observed.**

Caution

■ **This indicates the dangerous situation which could lead to a injury or cause damage of the machine,**

*Important:

■ **This booklet illustrates the important directions about usage of the machine: maintenance, inspection, and storage.**

For Safety, Please Read the Instruction Manual

For safety, it is important to follow below guidelines.

Caution

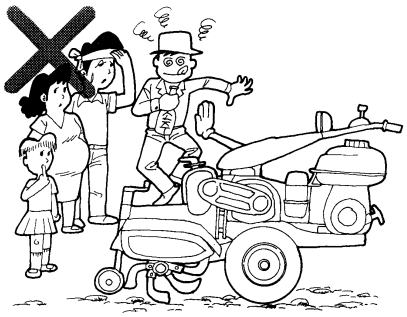

Do not operate the machine if the driver meets below condition:

- Pregnant
- Intoxicated
- Age fewer than 18
- Taking a medication which will influence driving ability

Caution

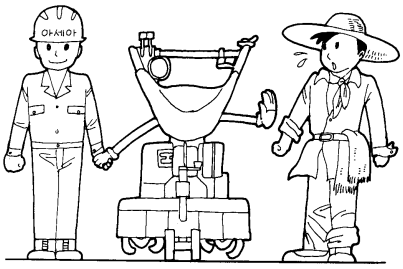

Do not wear loose clothing or hang towel around the waist as they may enter into the machine.

Please wear helmet, safety glass, glove, and safety boots if the working condition is rough.

Caution

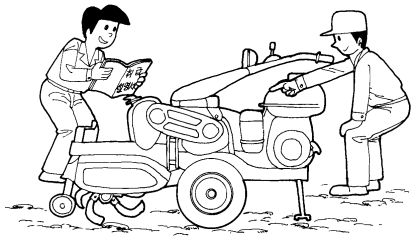

In case of lending the machine, be sure to explain operational and safety issues.

For Safety, Please Read the Instruction Manual

Danger!

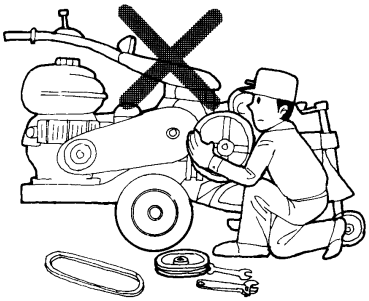

Do not reconstruct the machine.

Reconstructing machine may cause serious Accident, or it may lead to malfunctioning of the machine.

2. Name of each part of the machine

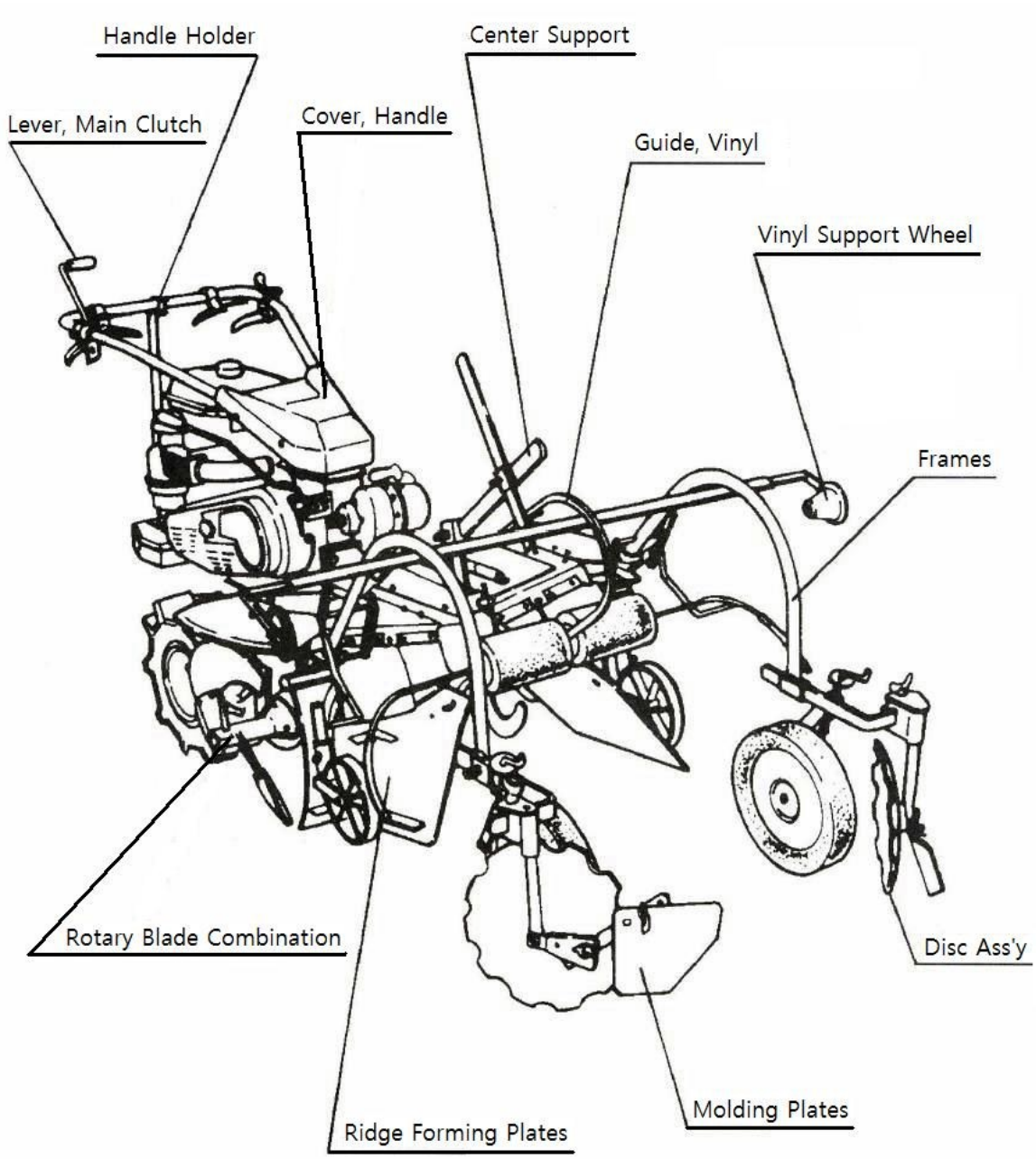

3. Specification

Form					FM-120
Rotary Attached			Length (mm)		1450
			Width (mm)		1420
			Height (mm)		750
			Weight (kg)		125
Operating Working Gear					Reverse 1 Stage
Operating Method					Reverse Mode
Operating Efficiency					826 (m² / hr)
Applicable Crops					Corn, Water Melon, Sesame, and etc.
RIDGE SIZE	ROUND	A	MIN	450(mm)	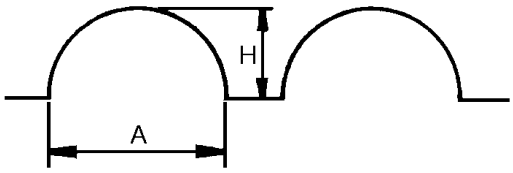
			MAX	700(mm)	
		H	MIN	210(mm)	
			MAX	280(mm)	
		VINYL WIDTH		750~1200(mm)	
	ANGULAR	A	MIN	400(mm)	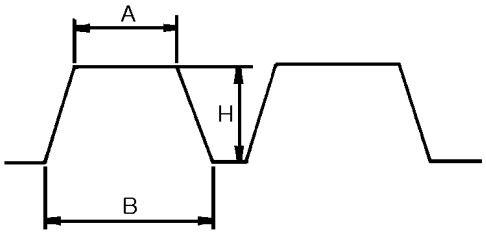
			MAX	650(mm)	
		B	MIN	580(mm)	
			MAX	1370(mm)	
		H		120,150,180(mm)	
		VINYL WIDTH		750~1800(mm)	

※ When ATC modifies the machine for quality and performance upgrade, above information may change. (0511)

4. Attaching the Implement

1. When rotary is attached on the main body.

Please check the location of chain case as seen from [Fig. 1]. If the rotary is not attached on the main body, please make sure to assemble it.

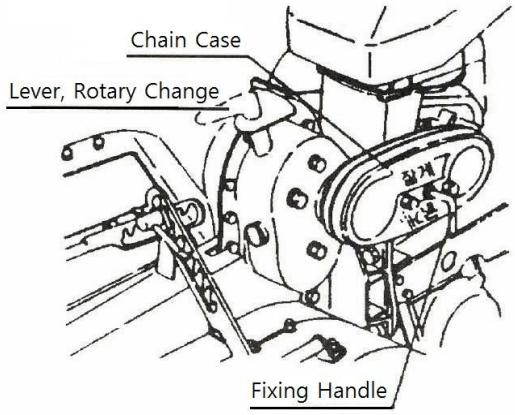

[Fig. 1]

※ **There is a word "finely" engraved on the chain case. Be sure to attach the chain case where the word is not showing upside down.**

2. Disassembling the Tail Wheel

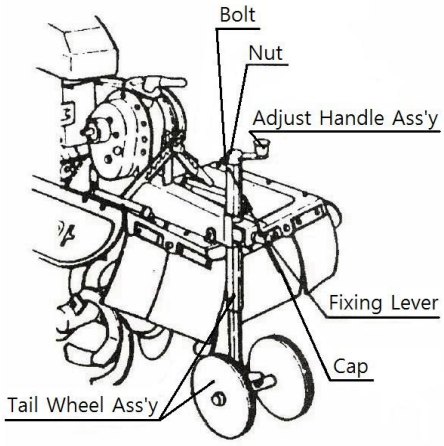

[Fig. 2]

Unscrew fixing nut and bolt from the handle compound. After taking out the handle compound, unscrew the fixing lever and disassemble the tail wheel towards to downward direction. (Please avoid losing disassembled parts when changing the implement)

3. Assembling the Rotor Cavity

1) Please disassemble the part if other implement is attached to rotary shaft.

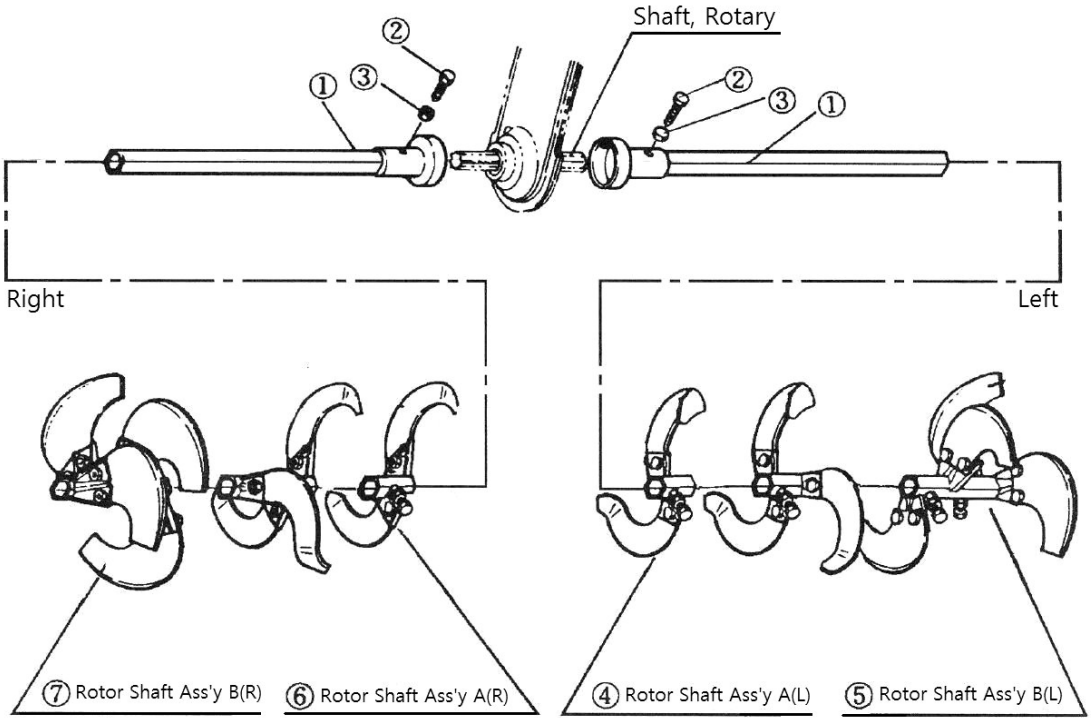

[Fig. 3]

2) Assemble with the hole from rotor shaft compound bolt and hole from rotary shaft bolt (left and right sides). Please screw knock bolt fully and fix the nut.

3) Left and right sides are defined from the view from engine. Check rotor compound (left, small) and Rotor compound (right, small) is set on hexagon compound. Make sure that the blades are symmetrical to each other.

4) Check rotor compound (left, large) and rotor compound (right, large) is set on hexagon compound. Please check the direction of blades is symmetrical to each other.

5) If the rotor compound is not symmetrical to each other or the directions of blades are set in different position, this will overwork the engine and bring out a bad working result.

6) When increasing the width of ridging operation, fix the extension shaft on the rotor shaft. In this case, assemble the small rotor compound to inner position and large rotor compound to outer position.

4. Assembling the Cavity Plate

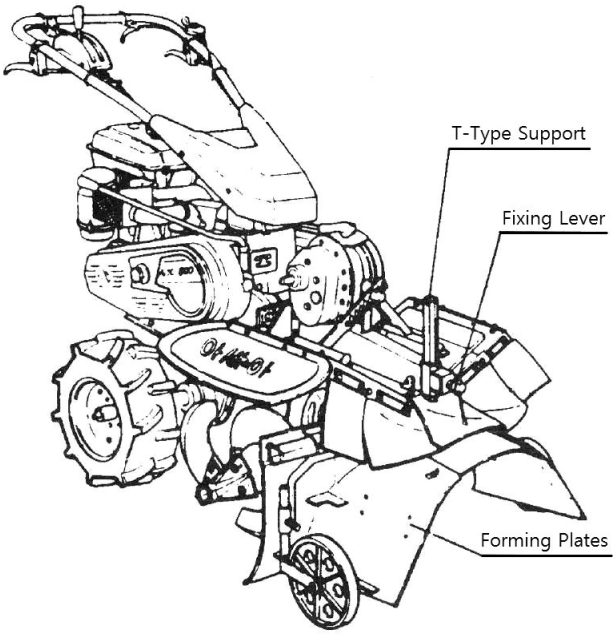

[Fig. 4]

A. After disassembling the tail wheel, attach the T-shaped supporter on hexagon shaped hole where the rotary frame is taken out. Push the T-shaped supporter upward from the hexagon shaped hole and fix the position with drive shaft pin through the hole.
B. Adjust and fix the position of cavity plate depending on desired width.
C. Set and fix the position of end of rotor blade 3 cm outwards from the cavity plate. Afterwards, fix the position of cavity plate by adjusting fixing lever.

5. Changing the Wheel

1) Because riding mulcher is only operated in a reverse mode, operator needs to switch the left tire and right tire before working.
2) In case of working in stiff slope or slippery soil condition, operator may attach the steel wheel made for ridging operation, inside of the rubber tire, for effective usage.

6. Assembling the Vinyl Mulching Device

1) Place the mulching device on the groove which is located on top of cavity plate. Be sure to check that the position of left side and right side of mulching device is set correctly, and check the sponge roller and end of cavity plate is on the same level.

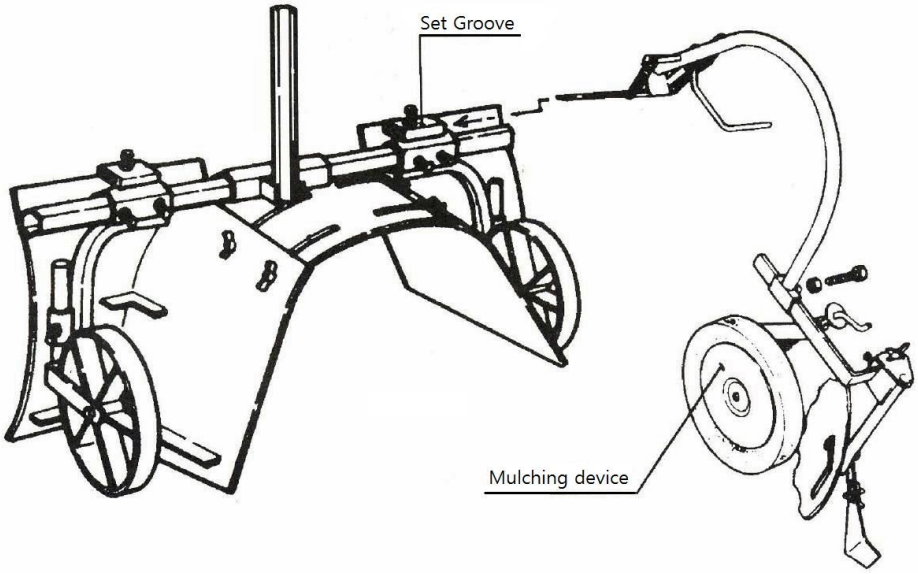

[Fig. 5]

2) Assemble the center supporter on T-shaped supporter through hexagon shaped pipe and attach vinyl feeding compound.

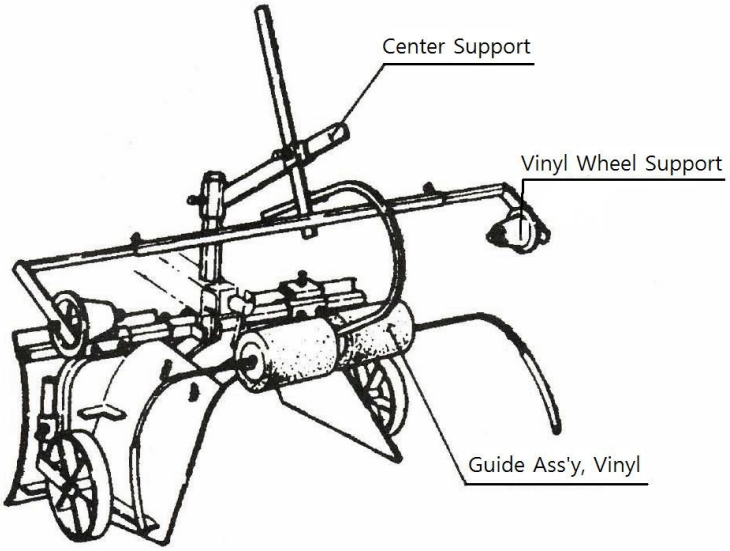

[Fig. 6]

3) When increasing the cavity width, this process may be handled by using two hexagon shaped pipes or / and utilizing extension plate as much as possible.
At this moment, be sure to connect the sit arm connector as seen from [Fig. 7].

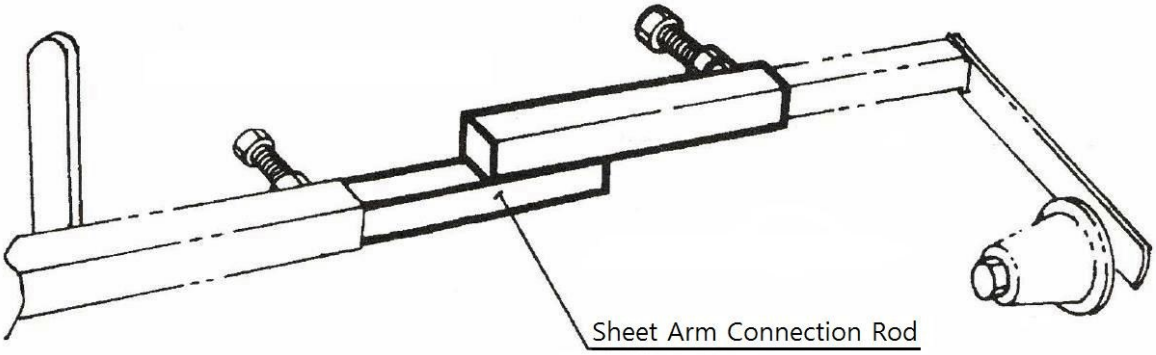

[Fig. 7]

4) Locking the Frame of Mulching Device
Please lock the fixing lever during the operation and unlock the fixing lever when turning or transporting the machine.

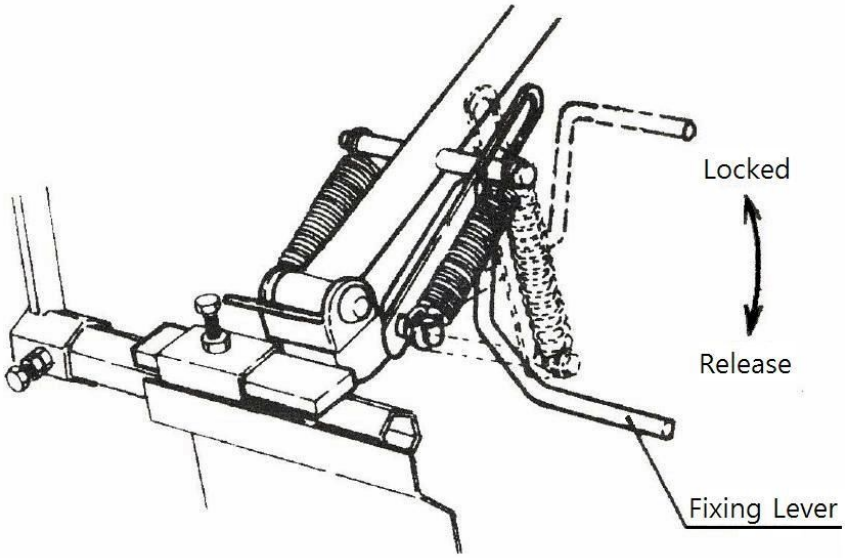

[Fig. 8]

7. Assembling the Fixing Plate of Handle

1) Fix the front hitch from engine frame and assemble balance weight.
2) Unscrew the weight fixing bolt, fix the position of bottom board as seen from [Fig. 9], and assemble them together.
3) Adjust the handle height and screw the adjustable bolt.

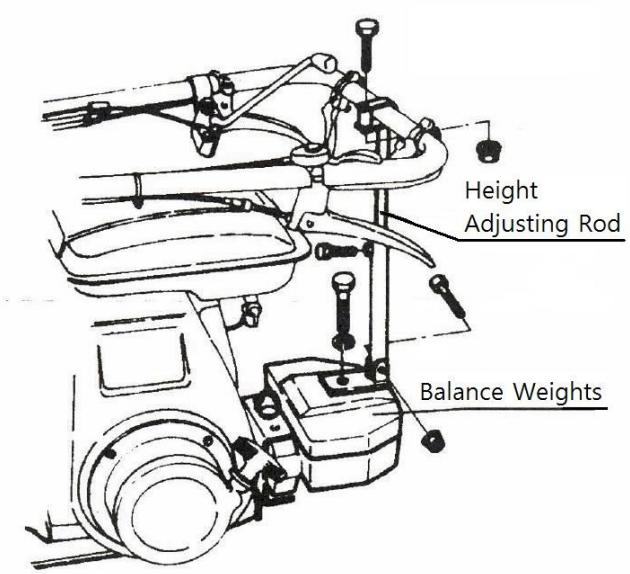

[Fig. 9]

5. Operating Method

i. Please study the specification and purchase correct vinyl size for desired application.

ii. Fix the position of sponge from vinyl feeder where it is keeping the distance about 2 cm from surface of ridge. Also, please place the vinyl on center position.

iii. When transporting or turning the machine with the mulching device attached, bend the disk compound towards to handle.

iv. Operation direction is always in reverse mode with speed gear at 1st stage. When turning the machine, rotary is set to clock wise rotation with speed gear at 1st stage.

v. Please turn engine and test the machine by operating it about 1 m distance. After checking the operation condition, adjust the setting if needed.

vi. Widening the operating width while pressing the handle downward will allow easier operation of the machine.

6. Checking Before Operation and About Safe Operation

1. Preparation Prior to Operating

1) Please check whether mulching device is attached to the main body correctly. Also, please check all of nuts and bolts are fully tightened.
2) Set and fix the position of end of rotor blade 3 cm outwards from the cavity plate.
3) Check whether cavity plate, width of ridge, and width of vinyl meet the desired requirement.
4) Please check the depth of rotary is sufficient for wrapping operation. Be sure to check the humidity lever of soil is suitable.
5) Please check whether disk compound, sponge roller, and sheet supporting wheel are turning smoothly.
6) Please install a sheet feeder which can be operated with round and angular ridges simultaneously. If the operating width is larger than normal specification, please assemble the extensional part for such working requirement.
7) If plastic is easily unwrapped from the machine, this forms wrinkle on the marched vinyl. To prevent such wrinkle, please adjust supporting wheel where the rate of plastic intake slows down.

2. Driving Method

1) Please start the engine while main clutch from main body is disconnected and set the rotation speed to low.
2) Set the speed change lever in the neutral position and connect the main clutch using the other hand. Also, please set the rotor change lever clockwise direction with gear at 1st stage.
3) Before the operation, please check whether there is any obstacle behind the working field. Afterwards, driver may operate the machine by setting the speed change lever in reverse mode with speed gear at 1st stage and connecting the main clutch to low speed.
4) Operation speed may be adjusted by governor lever.
5) It is easier to turn the machine in forward mode with gear at 1st stage. To do so, please unlock the frame of mulching device and hold covering device towards to the engine.

6) After turning the machine, please lower the covering device and lock the frame.
7) Please hold the handle up if riding operation is working fine while engine is being overworked. Please hold the handle down if ridging operation is not performing well.

7. Maintenance and Preservation of the Machine

1. Maintenance

1) Please turn off the engine before the inspection.
2) Please check whether all of nuts and bolt are fully tightened.
3) Please check the rotor blades and change the blades if there is too much abrasion.
4) Please apply grease and oil on all moving parts.

2. Maintenance Before Storing

1) Please swipe with all parts with oil towel in order to prevent machine getting rusted.
2) Please clean the main body and implement, and apply oil and grease on all moving parts.

3. Storing

1) Please store the machine where there is good ventilation and away from sun / rain.
2) When storing the machine for long period of time, please make sure to drain fuel from all parts.

8. Cause / Countermeasure about Operational Fault and Error

1. Ridging and Cavity Devices

Problem	Cause	Countermeasure
Riding and Cavity Problem	Problem with working depth of rotary	Adjust depth of rotary over 15cm
	Problem with width of rotary operation	Adjust rotary blade to come out 3 cm more than the end of cavity plate
	Operating speed is too fast	Twist the handle small amount and push the handle
Overworking of Engine	Wrong assembling of T-Shape supporter	Be sure to push T-shaped supporter upward fully and fix the position with the pin
	Wrong adjustment of the height of wheel	Avoid cavity plate hitting from the ground by adjusting correct wheel height
	Rotation of rotor is not operating properly	Be sure to set the rotor speed change lever in clockwise rotation with gear at 1st stage (also check connecting chain case is in “finely” mode)
Operational Problem in Stiff Slope	Wrong setting of tire width	Adjust the width between tires with the width of the ridge. Operate the machine by putting upper wheel on the groove.
Driving Problem	Overworking with rotor device due to too heavy amount of soil	Adjust the handle and push the handle down
	Slippage of tires	Check the direction of rubber tire and attach steel wheel made for ridging purpose.

2. Mulching Device

Problem	Cause	Counter Measure
Soil Is Not Covering Vinyl	Width of vinyl is narrow	Prepare a wider vinyl
	Wrong angle of disk wheel	Increase the angle of disk compound
	Lack of soil	Consider the size of ridging cavity depending on amount of soil
	Vinyl sheet is set too high	Vinyl sheet should be positioned about 2~3 cm above the ground
	Fixing lever from mulching device is not in lock position	Adjust fixing lever to lock position
Mulching Operation Is Not Working In Stiff Slope	Not operating with soil covering plate made for stiff slope	Adopt the soli covering plate made for stiff slope and increase angle of disk wheel
Vinyl Is Being Torned	Vinyl feeder is contacting with the ridge	Adjust the distance from vinyl feeder to the ridge about 2~3 cm
	The tension from sponge wheel is too strong	Lower the tension of sponge wheel