# CONTENTS

1. Contents ---------- 1

2. Safety Instructions ---------- 3

3. Parts Name ---------- 4

4. Feature ---------- 4

5. Specifications ---------- 5

6. Attaching the Plow ---------- 5

7. Guidelines ---------- 10

Parts List ---------- 11

Please Read Instruction Manual Carefully Before Operating the

## 2. Safety Instructions

**1. Please read instruction manual carefully before operating the machine.**

**2. Do not operate the machine when driver is not capable of controlling it.**

**3. Do not wear loose clothe while operating the machine. This may cause injury.**

**4. Before operating the machine, check nuts and bolts are fully tightened.**

**5. When checking, removing, and assembling the machine, set the machine on a flat are while engine is turned off.**

**6. When fueling, do not smoke and beware of flammable objects nearby.**

**7. Do not touch the rotating parts of rotary while engine is turned on.**

**8. Do not remove the cover while operating the machine. Pay special attention not to sprain ankles when moving backward.**

**9. When starting the engine, put the main clutch on disengage position. If there is anything wrong during the operation of machine, please turn off the engine immediately.**

**10. Do not operate the engine in a closed area with poor ventilation. The exhaust gas may cause suffocation.**

**11. During or after the operation of machine, temperature of the silencer will rise very high. Do not touch the silencer or put cover over the machine right after operation.**

**12. Please inspect the machine daily to avoid damage of machine or injury.**

## 3. Parts Name

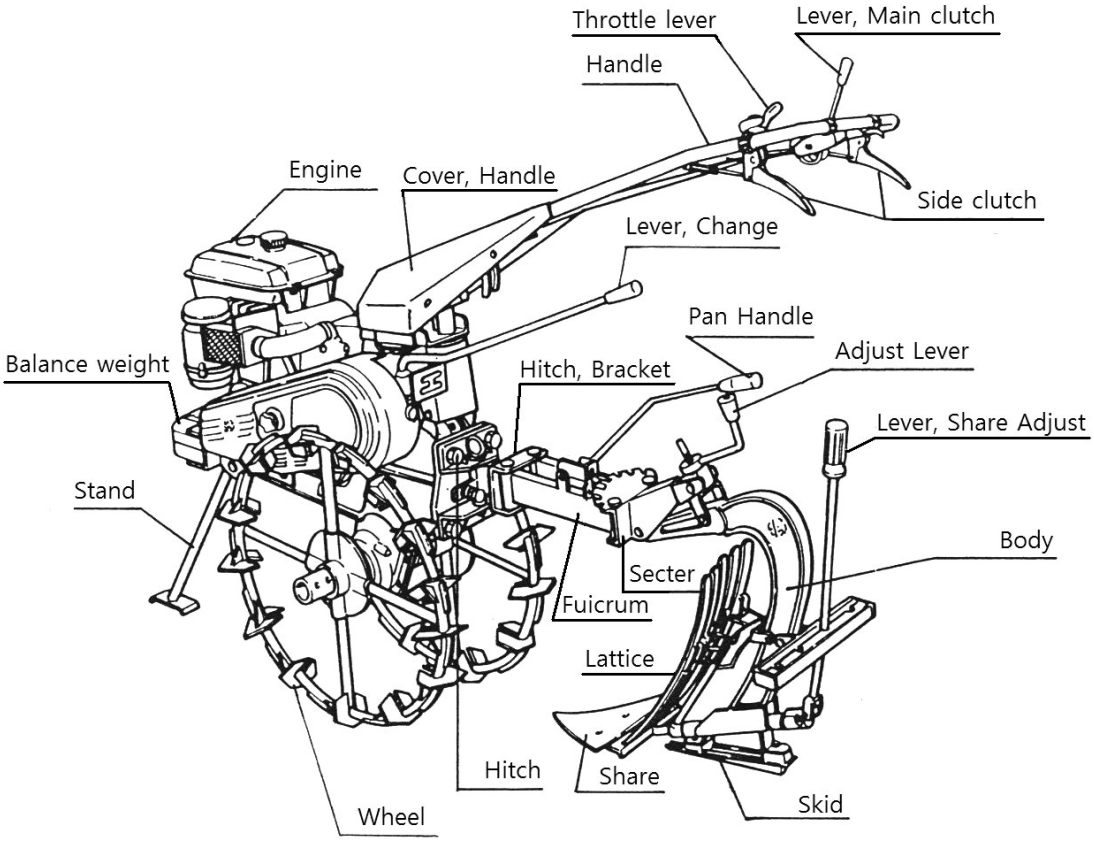


## 4. Feature

(1) This plow is able to operate in depth with both directions. Due to small turning radius, operator may use the machine in a narrow area such as vinyl house.

(2) When comparing with similar machines in the market, the capacity of machine is lighter and more efficient than substitute goods.

(3) Due to the simple structure and operation, operator may use the machine easily.

## 5. Specifications

| Form | Length (cm) | Width (cm) | Height (cm) | Weight (kg) | Plowshare (cm) |
|---|---|---|---|---|---|
| **AP-25** | **82** | **26.5** | **78** | **25** | **26.5** |

## 6. Attaching the Plow

(1) Detaching the Rotary

① Unscrew the fixing handle and disassemble the connecting chain case. (Fig. 1)

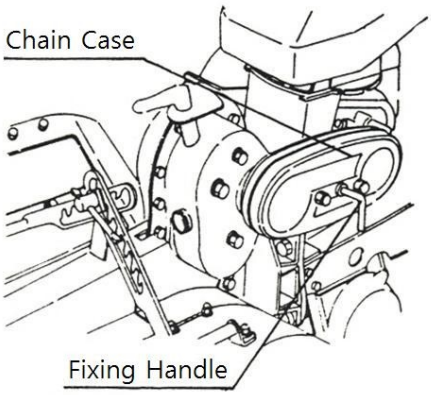


**[Fig. 1]**

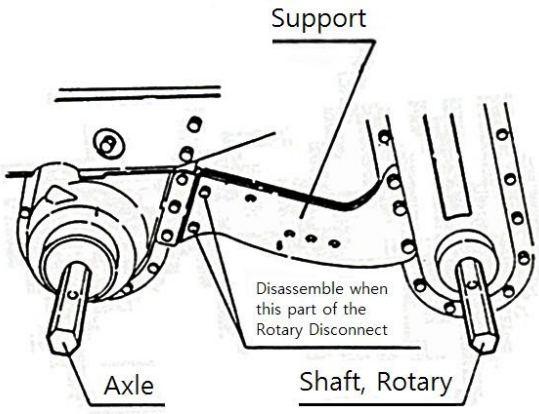


**[Fig. 2]**

② Unscrew two fixing bolts from the mission. (Fig. 2)

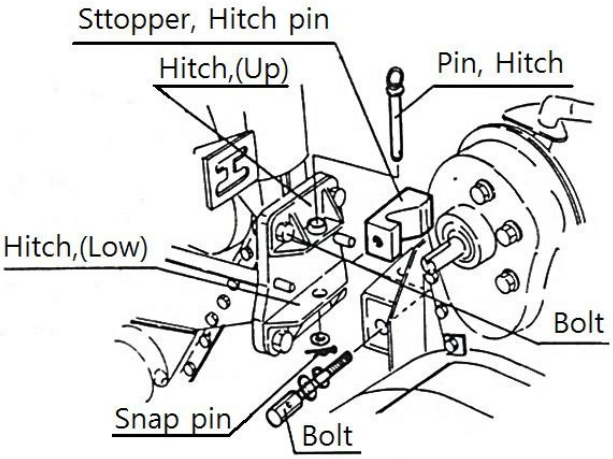


**[Fig. 3]**

③ Disassemble the rotary by taking out the hitch pin. This pin may be taken out by unscrewing the pulling bolt (do not unscrew the pulling bolt fully) from steel supporter. Operator needs to shake the handle up and down when taking out the hitch pin. (Fig. 3)

(2) Attaching the Plow

① Rotate the handle 180° as seen from [Fig. 4] and adjust speed change lever as seen from [Fig. 5].

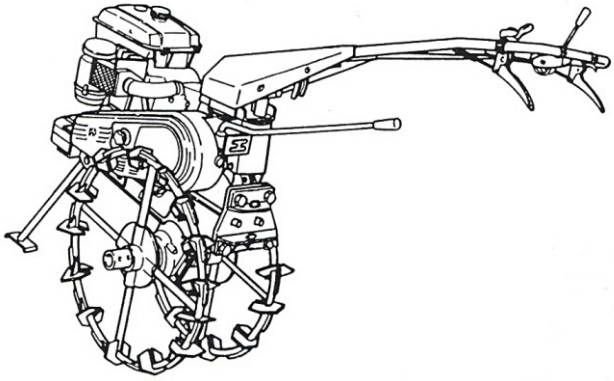

**[Fig. 4]**

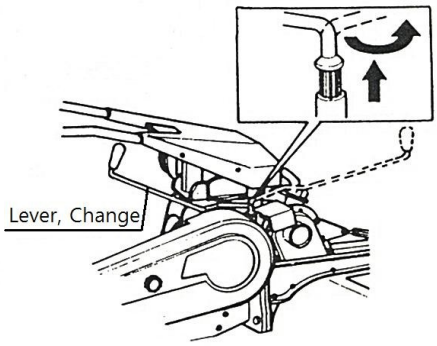


**[Fig. 5]**

② Unscrew two bolts, M10x65, from the engine frame and take out two spacing tubes. Insert front hitch into the fixing engine frame and assemble them by screwing M10x65 bolt as seen from [Fig. 6].

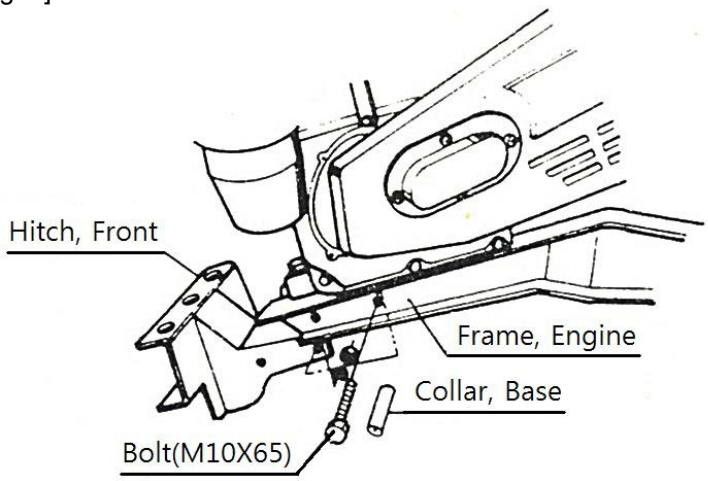


**[Fig. 6]**

③ After screwing two bolts, M12x35, attach the balance weight into the front hitch with the hitch pin. Insert the snap pin and place the balance weight where it is positioned at the center. Finally, fix the position by using the tightening where there is no free movement.

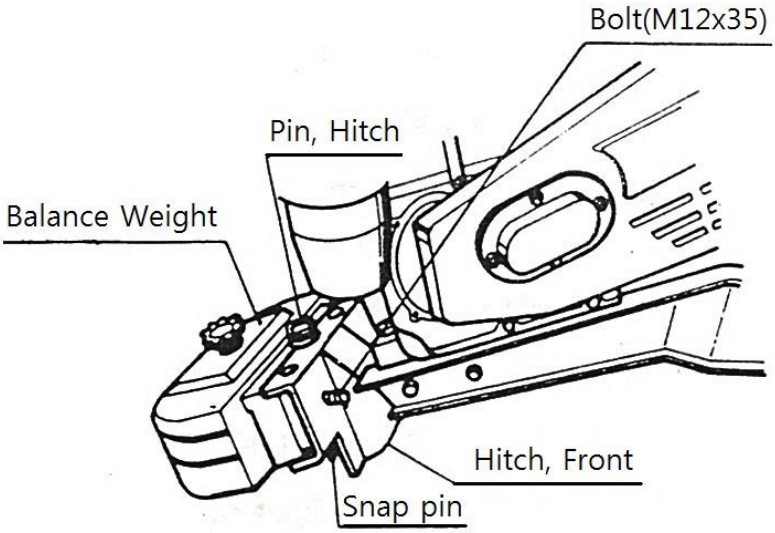


**[Fig. 7]**

④ Attach the hitch as seen from [Fig. 8].

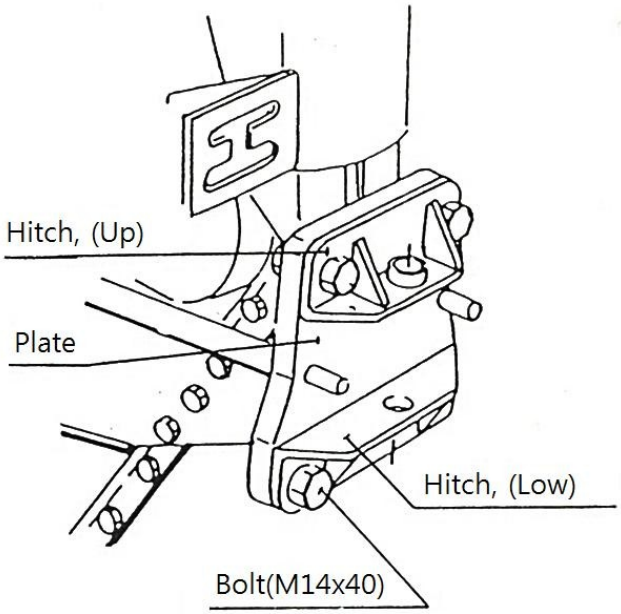


**[Fig. 8]**

⑤ Take out the rubber wheels and insert steel wheels for the plowing operation. Be sure to attach direction of wheels as seen from [Fig. 9].

The rug shape should be ∧ shape when looking from the handle.

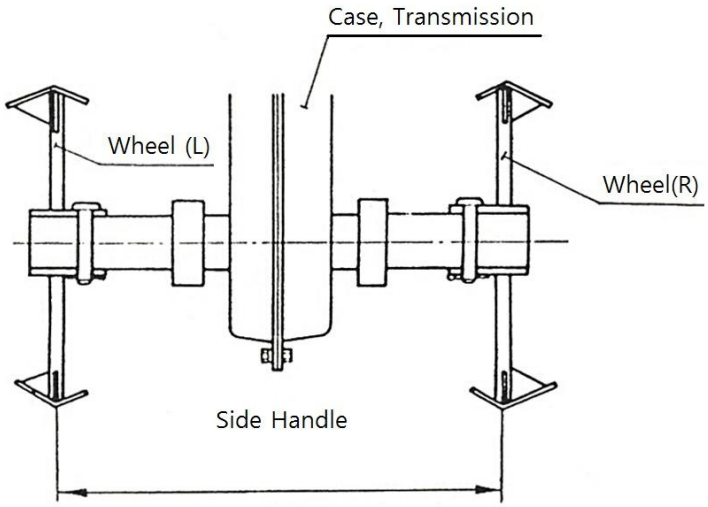


**[Fig. 9]**

⑥ Attach the pitching part from the plowing device to the hitch. Assemble these two parts by using hitch pin, washer, and snap pin.

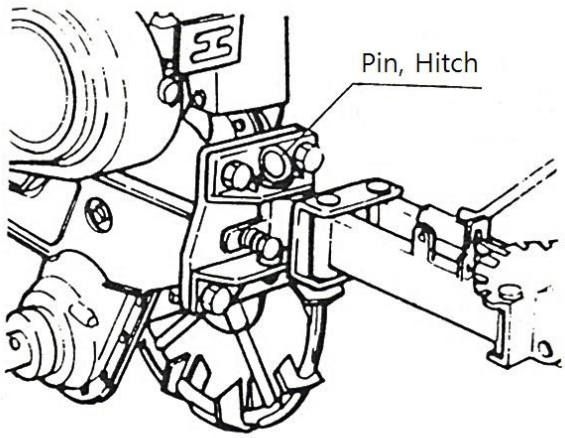


**[Fig. 10]**

⑦ After assembling the plowing device to the main body, set the distance between the surface of hitch and bolt to 3 ~ 5 mm. This is to set a correct adjustment for the left and right movement gap of the plow.

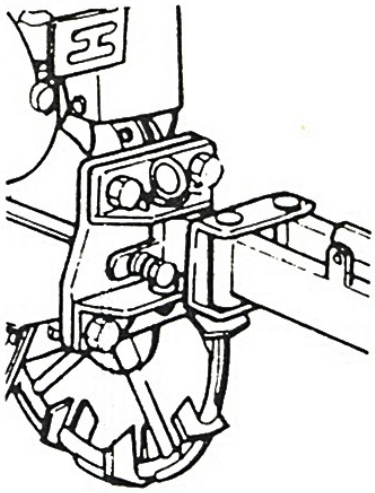

**[Fig. 11]**

## 7. Guidelines

(1) **After assembling the plowing device to the main body, insert grease on all moving or engaging / connecting parts.**

(2) **During the operation or driving, push the stand towards to inner direction which is located on the front hitch.**

(3) **When operating the machine with the main clutch (W-Tension method), adjust the speed to low speed and gear stage at 2.**

(4) **Driving speed may be adjusted by changing the speed governor lever.**

(5) **Adjust working depth of the plowing device depending on the soil condition.**

(6) **When operating the plowing device, use the plowing handle to set the left direction or right direction, and use angle adjustment lever to change the angle.**

(7) **When operating the machine, do not hold on to the side clutch. Always grab the handle and emit a small force to the desired direction.**

(8) **When turning the machine, adjust to low speed by using governor lever, and hold the side clutch lever to the desired direction while plowing device is fully lifted.**