# *THE ASIA PARTS LIST*

***Never use other than GENUINE ASIA PARTS***
***they are standardized, tested and proved.***

***Using genuine parts saves your time and money above all.***
***Ensures that your machine will always be ready for immediate work.***

# CONTENTS


| No. | Group | Description | Page |
|---|---|---|---|
| 1 | AB090-G010A | Plow Parts Group | 14 |
| 2 | AB090-G020A | Plow Attach Parts Group | 18 |

ASIA

# G010A

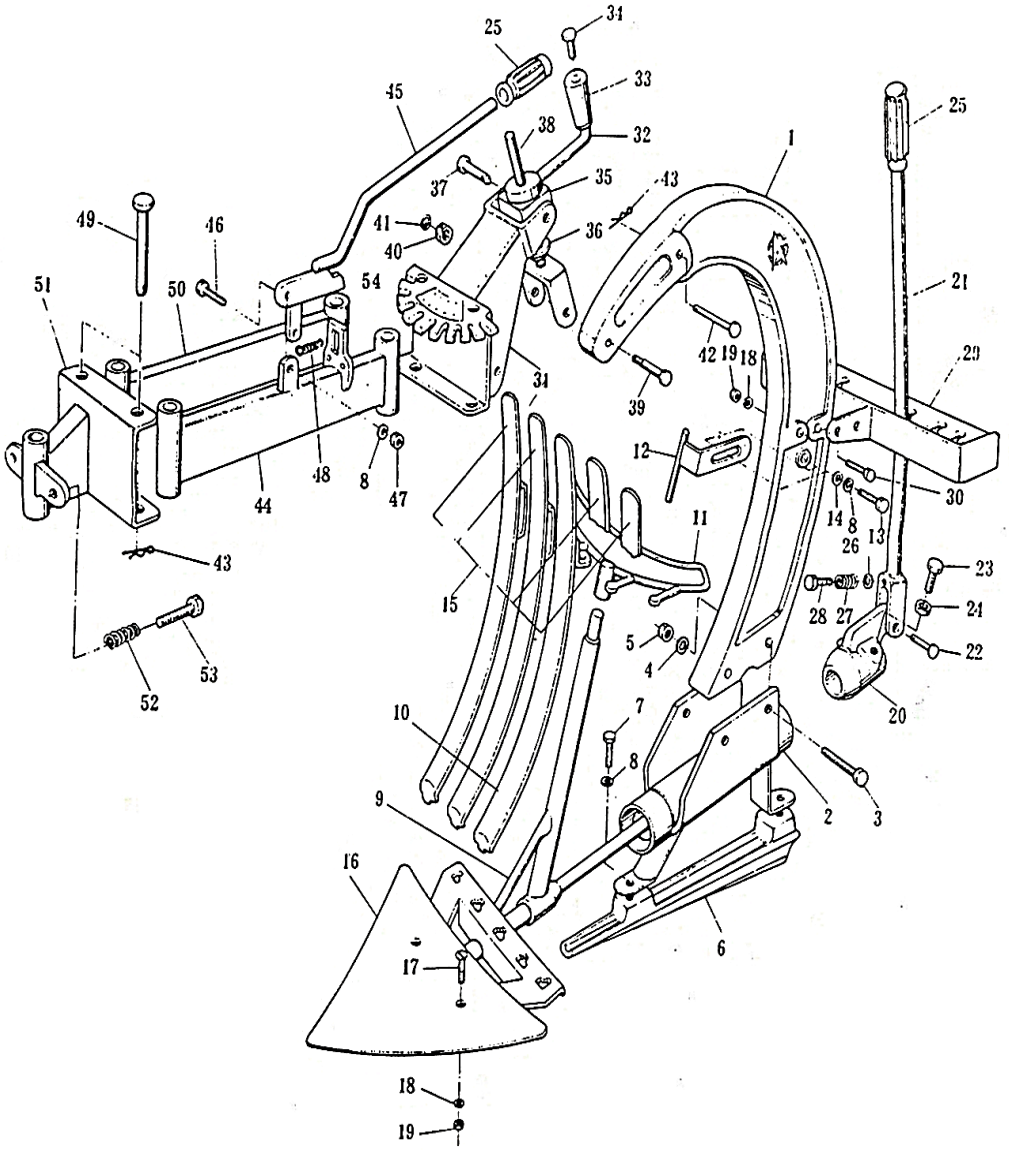
25
34
33
45
38
32
1
25
37
35
43
49
46
41
36
40
51
50
54
21
42
19
18
29
39
31
12
30
48
8
47
44
14
8
13
26
11
43
23
15
28
27
24
5
22
4
52
53
20
7
10
8
2
3
9
16
6
17
18
19

2012.07. **G010A** **Plow Parts Group** AP-25

| No. | Parts No. | Size | Parts Name | Q'ty | Remarks |
|---|---|---|---|---|---|
| 1 | DP-0101 | | Body | 1 | |
| 2 | DP-0102 | | Holder Ass'y | 1 | |
| 3 | A100-10×50Z | M10P1.25×50 | Bolt | 2 | |
| 4 | A204-10Z | M10 | Spring Washer | 2 | |
| 5 | A160-10Z | M10P1.25 | Nut | 2 | |
| 6 | DP-0103 | | Skid | 1 | |
| 7 | A100-8×14Z | M8P1.25×14 | Bolt | 2 | |
| 8 | A204-8Z | M8 | Spring Washer | 1 | |
| 9 | DP-0104 | | Shaft Ass'y | 1 | |
| 10 | DP-0105 | | Lattice(A) | 1 | |
| 11 | DP-0106 | | Plate Ass'y | 1 | |
| 12 | DP-0107 | | Guide | 1 | |
| 13 | A100-8×20Z | M8P1.25×20 | Bolt | 1 | |
| 14 | A200-8Z | M8 | Plain Washer | 1 | |
| 15 | DP-0108 | | Lattice(B) | 4 | |
| 16 | DP-0109 | | Share | 1 | |
| 17 | DP-0110 | | Screw | 2 | |
| 18 | A204-6Z | M6 | Spring Washer | 4 | |
| 19 | A160-6Z | M6P1.0 | Nut | 4 | |
| 20 | DP-0112 | | Guide Grip | 1 | |
| 21 | DP-0113 | | Lever, Share Adjust | 1 | |
| 22 | DP-0114 | | Pin | 1 | |
| 23 | A100-12×22Z | M12P1.25×22 | Bolt | 2 | |
| 24 | A161-12Z | M12P1.25 | Nut | 2 | |
| 25 | DP-0115 | | Grip | 2 | |
| 26 | DP-0116 | | Washer | 1 | |
| 27 | DP-0117 | | Spring | 1 | |
| 28 | DP-0118 | | Adjust Bolt | 1 | |
| 29 | DP-0119 | | Adjust Lever | 1 | |
| 30 | A100-6×45Z | M6P1.0×45 | Bolt | 2 | |

# G010A

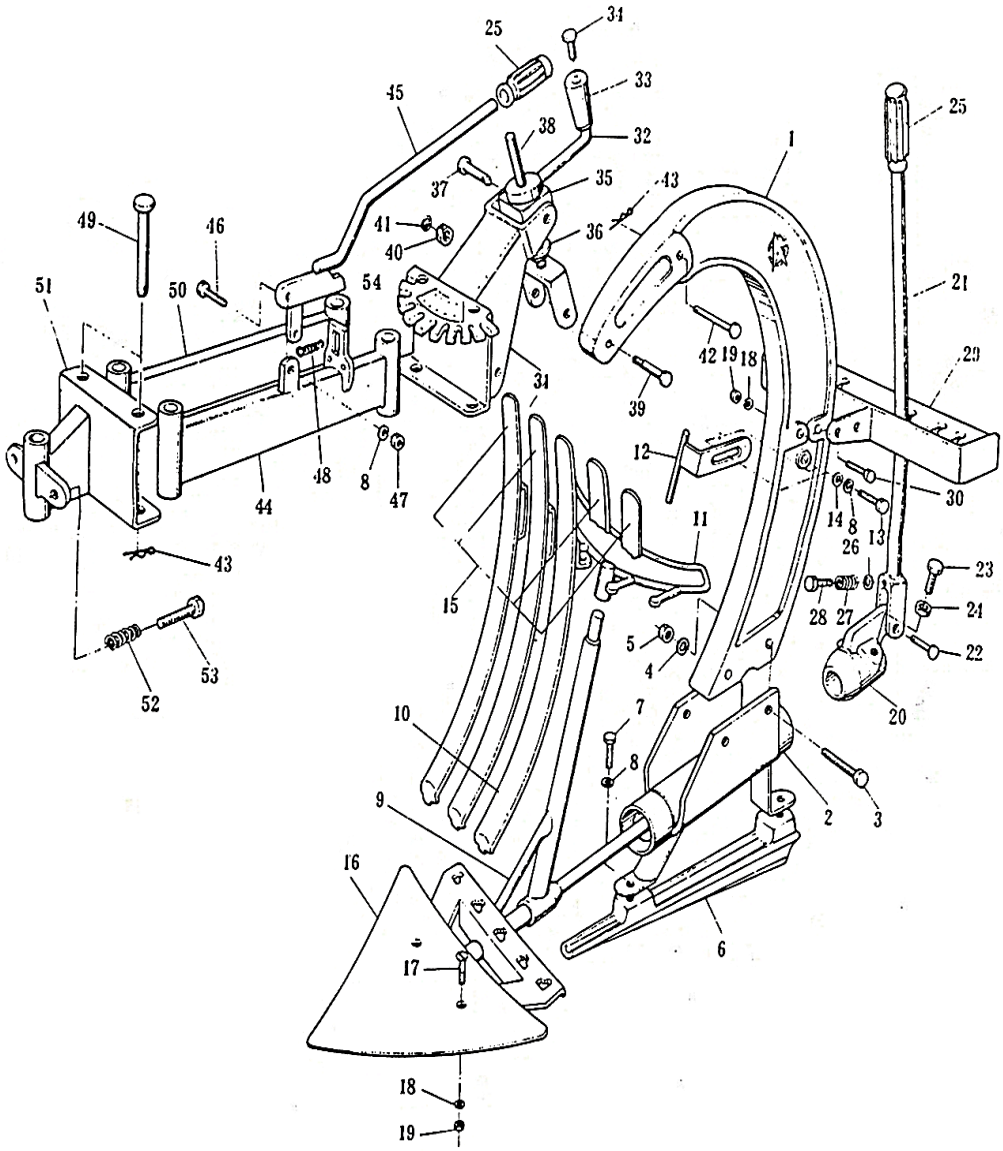
34
25
33
45
38
32
1
25
37
35
43
49
46
41
36
40
51
50
54
21
42
19
18
29
39
34
12
8
47
18
44
30
14
8
13
26
11
43
23
15
28
27
24
5
22
4
52
53
20
7
10
8
2
3
9
16
6
17
18
19

2012.07. **G010A** **Plow Parts Group** AP-25

| No. | Parts No. | Size | Parts Name | Q'ty | Remarks |
|---|---|---|---|---|---|
| 31 | DP-0121 | | Sector Ass'y | 1 | |
| 32 | DP-0122 | | Adjust Lever | 1 | |
| 33 | DP-0123 | | Grip | 1 | |
| 34 | DP-0124 | | Pin | 1 | |
| 35 | DP-0125 | | Guide | 1 | |
| 36 | DP-0126 | | Washer | 1 | |
| 37 | DP-0127 | | Pin | 2 | |
| 38 | DP-0128 | | Bolt | 1 | |
| 39 | DP-0129 | | Bolt | 1 | |
| 40 | A169-12Z | M12P1.25 | Nut, Slotted | 1 | |
| 41 | A320-3.2×25Z | Φ3.2×25 | Pin, Split | 1 | |
| 42 | DP-0130 | | Pin | 1 | |
| 43 | A322-12Z | Φ12 | Snap Pin | 5 | |
| 44 | DP-0131 | | Fulcrum(L) | 1 | |
| 45 | DP-0132 | | Handle Ass'y | 1 | |
| 46 | A100-8×22Z | M8P1.25×22 | Bolt | 1 | |
| 47 | A160-8Z | M8P1.25 | Nut | 1 | |
| 48 | DP-0133 | | Tension Spring | 1 | |
| 49 | DP-0134 | | Pin | 4 | |
| 50 | DP-0135 | | Fulcrum(R) | 1 | |
| 51 | DP-0136 | | Hitch, Bracket | 1 | |
| 52 | DP-0137 | | Spring | 2 | |
| 53 | A102-12×45Z | M12P1.75×45 | Bolt | 2 | |
| 54 | DP-0138 | | Name Plate | 1 | |

# G020A

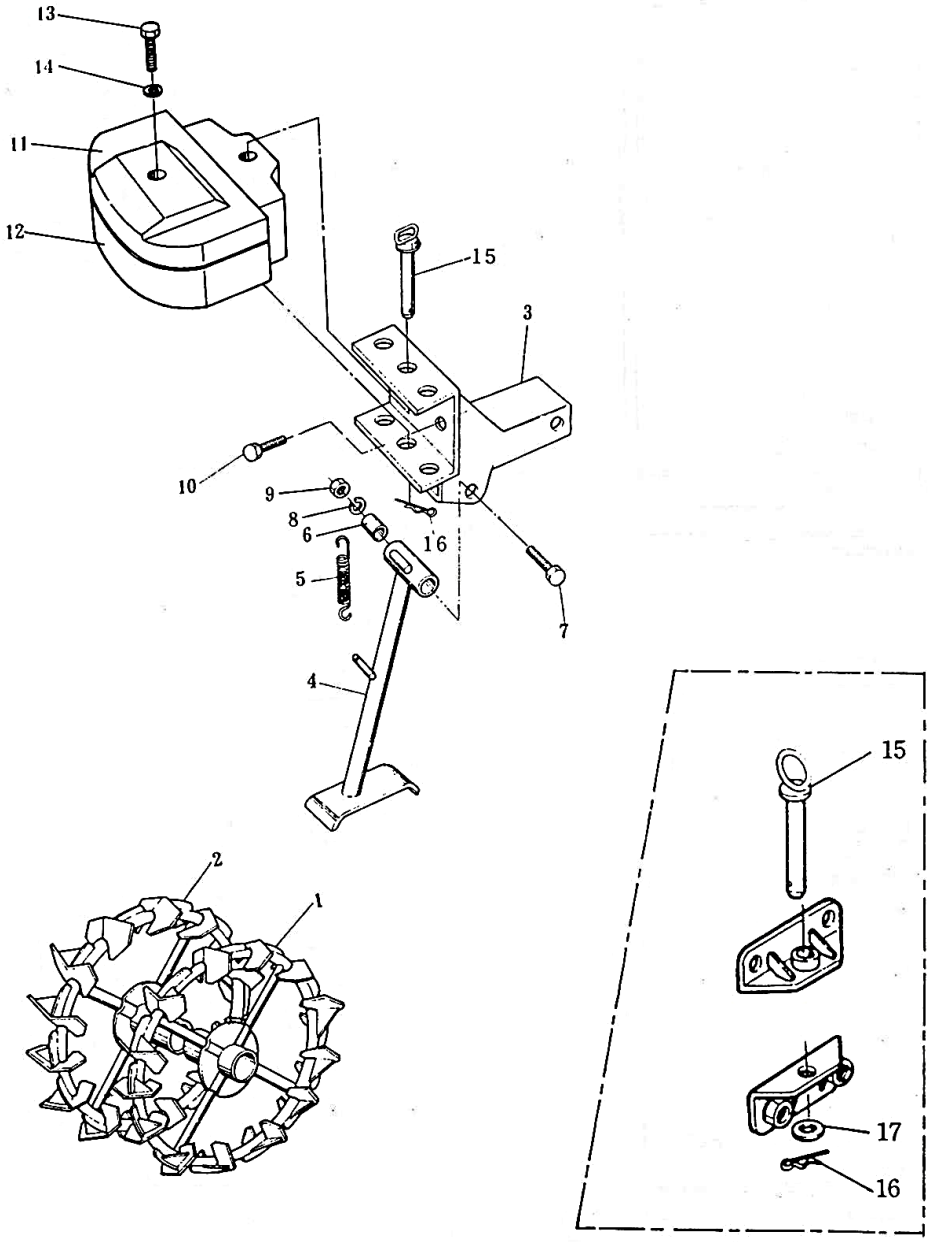

2012.07. **G020A** **Plow Attach Parts Group** AP-25

| No. | Parts No. | Size | Parts Name | Q'ty | Remarks |
|---|---|---|---|---|---|
| 1 | DP-0530 | | Wheel(L) | 1 | |
| 2 | DP-0531 | | Wheel(R) | 1 | |
| 3 | DP-0801 | | Front Hitch | 1 | |
| 4 | DP-0802 | | Stand | 1 | |
| 5 | DP-0803 | | Stand Spring | 1 | |
| 6 | DP-0804 | | Spacer | 1 | |
| 7 | A100-10×55Z | M10P1.25×55 | Bolt | 1 | |
| 8 | A204-10Z | M10 | Spring Washer | 1 | |
| 9 | A160-10Z | M10P1.25 | Nut | 1 | |
| 10 | A102-12×35Z | M12P1.75×35 | Bolt | 3 | |
| 11 | DP-0805 | | Balance Weight(A) | 3 | |
| 12 | DP-0806 | | Balance Weight(B) | 3 | |
| 13 | A1052-51255 | M12P1.75×55 | Bolt | 1 | |
| 14 | A204-12Z | M12 | Spring Washer | 1 | |
| 15 | DP-0811 | | Hitch Pin | 1 | |
| 16 | A321-16Z | JASO A 16 | Snap Pin | 1 | |
| 17 | DP-0812 | | Spacer | 1 | |